Wiring Diagrams

Automatic Transfer Switches

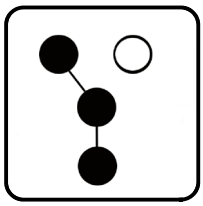

Models:

KCS/KCP/KCC
KBS/KBP/KBC

Controls:
MPAC™ 1200
MPAC™ 1500

ISO 9001
KOHLER POWER SYSTEMS
NATIONALLY REGISTERED

KOHLER®
Power Systems

TP-6917 2/17c

Product Identification Information

Product identification numbers determine service parts. Record the product identification numbers in the spaces below immediately after unpacking the products so that the numbers are readily available for future reference. Record field-installed kit numbers after installing the kits.

Transfer Switch Identification Numbers

Record the product identification numbers from the transfer switch nameplate.

Model Designation _____

Serial Number _____

Accessory Number	Accessory Description

Introduction

This manual provides wiring diagrams for the automatic transfer switch models listed on the front cover. Use the chart on the next page to identify the diagrams for your model. Diagrams are arranged in alphanumeric order on the pages following the chart.

Information in this publication represents data available at the time of print. The manufacturer of Kohler Co. products reserves the right to change this publication and the products represented without notice and without any obligation or liability whatsoever.

Service Assistance

For professional advice on generator set power requirements and conscientious service, please contact your nearest Kohler distributor or dealer.

- Consult the Yellow Pages under the heading Generators—Electric.
- Visit the Kohler Power Systems website at KOHLERPower.com.
- Look at the labels and decals on your Kohler product or review the appropriate literature or documents included with the product.
- Call toll free in the US and Canada 1-800-544-2444.
- Outside the US and Canada, call the nearest regional office.

Headquarters Europe, Middle East, Africa (EMEA)
Kohler Power Systems Netherlands B.V.
Kristallaan 1
4761 ZC Zevenbergen
The Netherlands
Phone: (31) 168 331630
Fax: (31) 168 331631

Asia Pacific
Power Systems Asia Pacific Regional Office
Singapore, Republic of Singapore
Phone: (65) 6264-6422
Fax: (65) 6264-6455

China
North China Regional Office, Beijing
Phone: (86) 10 6518 7950
(86) 10 6518 7951
(86) 10 6518 7952
Fax: (86) 10 6518 7955

East China Regional Office, Shanghai
Phone: (86) 21 6288 0500
Fax: (86) 21 6288 0550

India, Bangladesh, Sri Lanka
India Regional Office
Bangalore, India
Phone: (91) 80 3366208
(91) 80 3366231
Fax: (91) 80 3315972

Japan, Korea
North Asia Regional Office
Tokyo, Japan
Phone: (813) 3440-4515
Fax: (813) 3440-2727

Schematics and Wiring Diagrams

For **230–400 AMP KCS models equipped with the Decision-Maker® MPAC 1200 controller,** refer to the table below to identify the drawings for your unit. For all other KCS models, refer to the next table.

Model	Transition	Amps	Volts	Notes	Schematic	Page	Wiring Diagram	Page
Wall-mount models with 1223 mm (48 in.) enclosures:								
KCS	Standard	230	208–400	—	GM89642	5	GM89643	6
	Standard	230	600	Solid or Overlapping Neutral; Non-Seismic	GM93714	60	GM93715	61
	Standard	230	600	Solid or Overlapping Neutral; Seismic	GM89645	7	GM89646	8
	Standard	230	600	Switched Neutral	GM89645	7	GM89646	8
	Standard	260–400	208–600	Solid or Overlapping Neutral; Non-Seismic	GM93714	60	GM93715	61
	Standard	260–400	208–600	Solid or Overlapping Neutral; Seismic	GM89645	7	GM89646	8
	Standard	260–400	208–600	Switched Neutral	GM89645	7	GM89646	8
Floor-mount models with 1702 mm (67 in.) enclosures:								
KCS	Standard	230	208–400	—	GM89642	5	GM89643	6
	Standard	230	600	—	GM89645	7	GM89646	8
	Standard	260–600	208–600	—	GM89645	7	GM89646	8

The drawings listed in the table below apply to all KCS/KCP/KCC models equipped with the Decision-Maker® MPAC 1200 or Decision-Maker® MPAC 1500 controller that are not listed in the previous table.

Model	Transition	Amps	Volts	Schematic	Page	Wiring Diagram	Page
KCS	Standard	30–200	208–600	GM89642	5	GM89643	6
	Standard	230	208–480	GM89642	5	GM89643	6
	Standard	230	600	GM89645	7	GM89646	8
	Standard	260–600	208–600	GM89645	7	GM89646	8
	Standard	800–1200	208–600	GM89647	9	GM89648	10
	Standard	1600–4000	208–600	GM89649	11	GM89650	12
KCP	Programmed	150–600	208–600	GM89656	15	GM89657	16
	Programmed	800–1200	208–600	GM89654	13	GM89655	14
	Programmed	1600–4000	208–600	GM89658	17	GM89659	18
KCC	Closed	150–600	208–600	GM89661	19	GM89662	20
	Closed	800–1200	208–600	GM89663	21	GM89664	22
	Closed	1600–4000	208–600	GM89665	23	GM89666	24

The drawings listed in the table below apply to bypass/isolation models KBS/KBP/KBC.

Model	Transition	Amps	Volts	Schematic	Page	Wiring Diagram	Page
KBS	Standard	150–600	208–600	GM89669	25-26	GM89670	27-28
	Standard	800–1200	208–600	GM89671	29-30	GM89672	31-32
	Standard	1600–4000	208–600	GM89674	34-35	GM89673	33
KBP	Programmed	150–600	208–600	GM89679	40-41	GM89680	42-43
	Programmed	800–1200	208–600	GM89677	36-37	GM89678	38-39
	Programmed	1600–4000	208–600	GM89685	44-45	GM89686	46-47
KBC	Closed	150–600	208–600	GM89689	48-49	GM89690	50-51
KBC	Programmed	800–1200	208–600	GM89691	52-53	GM89692	54-55
KBC	Programmed	1600–4000	208–600	GM89693	56-57	GM89694	58-59

Note: Drawings are arranged in alphanumeric order on the following pages.

REV	DATE	REVISION	BY	M F
–	11–4–13	NEW DRAWING [CT55090]	DFS	
A	8–14–15	(D–8) TB2 MODBUS CONNECTION VIEW UPDATED; [CT120983]	BTW	

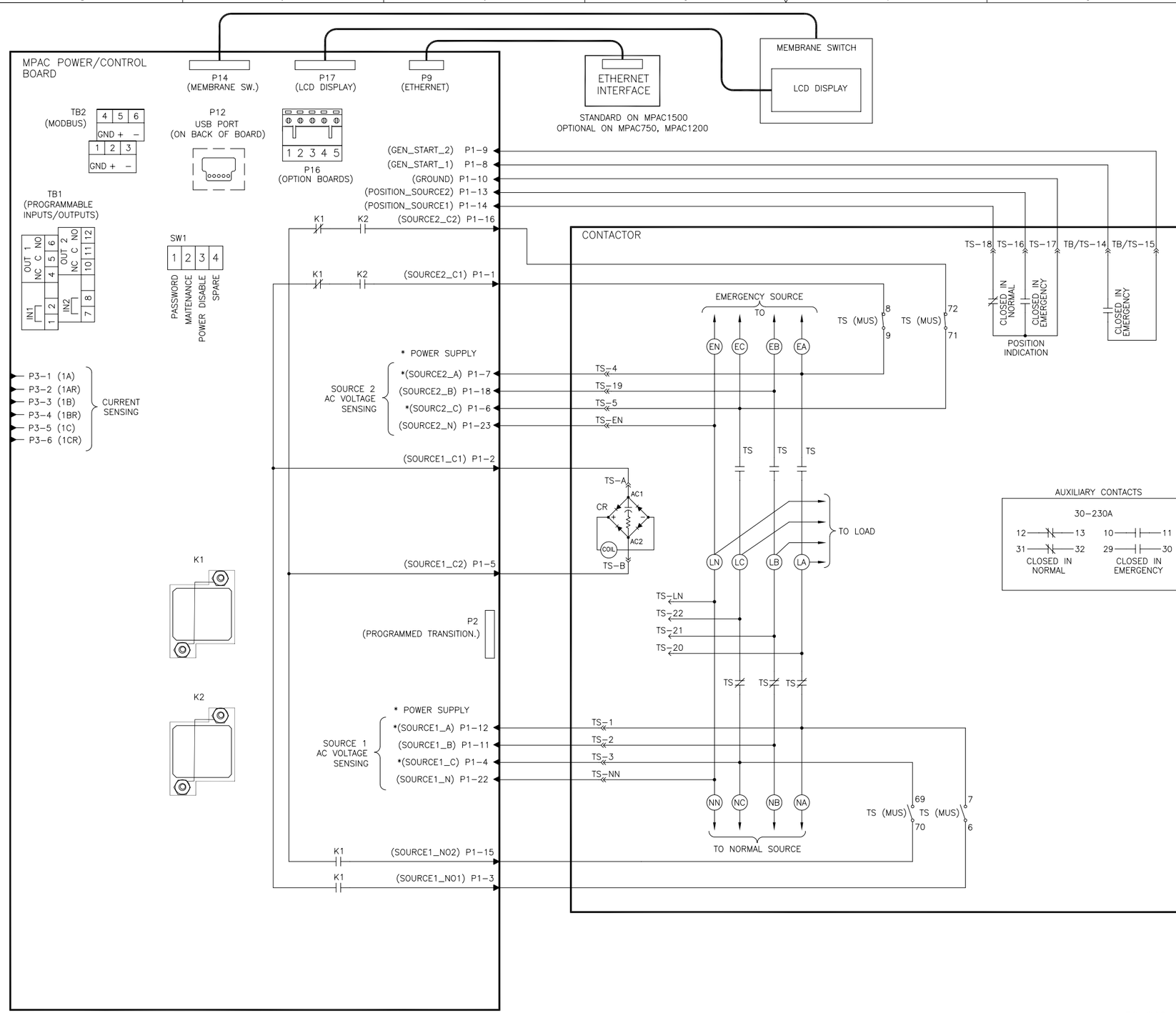

LEGEND

CR(#) – BRIDGE RECTIFIER
K(#) – RELAY
LCD – LIQUID CRYSTAL DISPLAY
MUS – COIL CLEARING CONTACT
P(#) – PLUG
SW(#) – DIP SWITCH
TB1 – PROGRAMMABLE INPUT/OUTPUT TERMINAL BLOCK
TB2 – MODBUS TERMINAL BLOCK
TS – TRANSFER SWITCH

TS (MUS) CONTACTS

TS	SOLENOID POSITION				
	PREF.	BEFORE TDC>	> <	BEFORE <TDC	STANDBY
7–6				X	X
69–70				X	X
8–9	X	X			
71–72	X	X			

NOTE:
DIAGRAM SHOWN WITH "NORMAL" ENERGIZED AND CONTACTOR IN THE NORMAL POSITION.

MODEL KCS
30–200A & 230A (208–480V)
STANDARD MECHANISM
STANDARD TRANSITION
FOR 30–200A & 230A (208–480V) WIRING DIAGRAM SEE GM89643

UNLESS OTHERWISE SPECIFIED –
1) DIMENSIONS ARE IN INCHES
2) TOLERANCES ARE:
.XXX± .010 ANGLES± 1/2°
.XX ± .030 SURFACE FINISH
.X ± .060 ✓ MAX.
FRACTIONS ±

APPROVALS		DATE
DRAWN	DFS	11–4–13
CHECKED	MTL	11–4–13
APPROVED	HCC	11–4–13

KOHLER CO.
POWER SYSTEMS, KOHLER, WI 53044 U.S.A.
THIS DRAWING, IN DESIGN AND DETAIL, IS KOHLER CO. PROPERTY AND MUST NOT BE USED EXCEPT IN CONNECTION WITH KOHLER CO. WORK.
ALL RIGHTS OF DESIGN OR INVENTION ARE RESERVED.

TITLE DIAGRAM, SCHEMATIC
SCALE / / / CAD NO. SHEET 1–1
PLOTTED DWG. NO. GM89642 D

REV	DATE	REVISION	BY	M F
–	11–20–13	NEW DRAWING [CT55090]	DFS	
A	8–14–15	(D–3) TB2 MODBUS CONNECTION VIEW UPDATEDL [CT120983]	BTW	

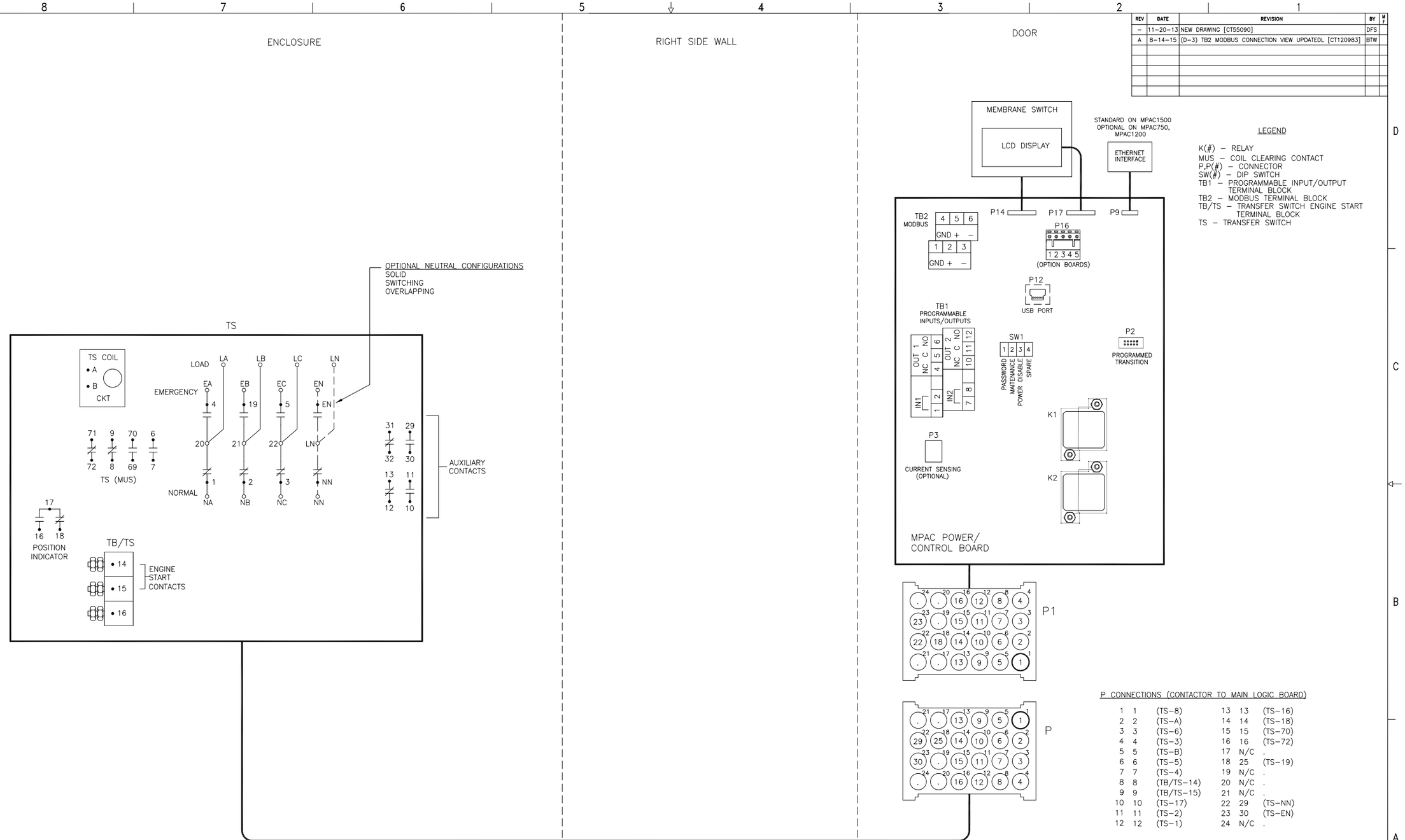

LEGEND

K(#) – RELAY
MUS – COIL CLEARING CONTACT
P,P(#) – CONNECTOR
SW(#) – DIP SWITCH
TB1 – PROGRAMMABLE INPUT/OUTPUT TERMINAL BLOCK
TB2 – MODBUS TERMINAL BLOCK
TB/TS – TRANSFER SWITCH ENGINE START TERMINAL BLOCK
TS – TRANSFER SWITCH

P CONNECTIONS (CONTACTOR TO MAIN LOGIC BOARD)

1	1	(TS–8)	13	13	(TS–16)
2	2	(TS–A)	14	14	(TS–18)
3	3	(TS–6)	15	15	(TS–70)
4	4	(TS–3)	16	16	(TS–72)
5	5	(TS–B)	17	N/C	.
6	6	(TS–5)	18	25	(TS–19)
7	7	(TS–4)	19	N/C	.
8	8	(TB/TS–14)	20	N/C	.
9	9	(TB/TS–15)	21	N/C	.
10	10	(TS–17)	22	29	(TS–NN)
11	11	(TS–2)	23	30	(TS–EN)
12	12	(TS–1)	24	N/C	.

MODEL KCS
30–200A & 230A (208–480V)
STANDARD MECHANISM
STANDARD TRANSITION
FOR SCHEMATIC DIAGRAM SEE GM69642

UNLESS OTHERWISE SPECIFIED –
1) DIMENSIONS ARE IN INCHES
2) TOLERANCES ARE:
.XXX ± .010 ANGLES ± 1/2°
.XX ± .030 SURFACE FINISH
.X ± .060 √ MAX.
FRACTIONS ±

APPROVALS		DATE
DRAWN	DFS	11–20–13
CHECKED	MTL	11–20–13
APPROVED	HCC	11–20–13

KOHLER CO.
POWER SYSTEMS, KOHLER, WI 53044 U.S.A.
THIS DRAWING, IN DESIGN AND DETAIL, IS KOHLER CO. PROPERTY AND MUST NOT BE USED EXCEPT IN CONNECTION WITH KOHLER CO. WORK.
ALL RIGHTS OF DESIGN OR INVENTION ARE RESERVED.

TITLE DIAGRAM, WIRING
SCALE / / / SHEET 1–1
PLOTTED CAD NO.
DWG. NO. GM89643 D

REV	DATE	REVISION	BY	M F
–	11–7–13	NEW DRAWING [CT555090]	DFS	
A	8–14–15	(D–8) TB2 MODBUS CONNECTION VIEW UPDATED; [CT120983]	BTW	

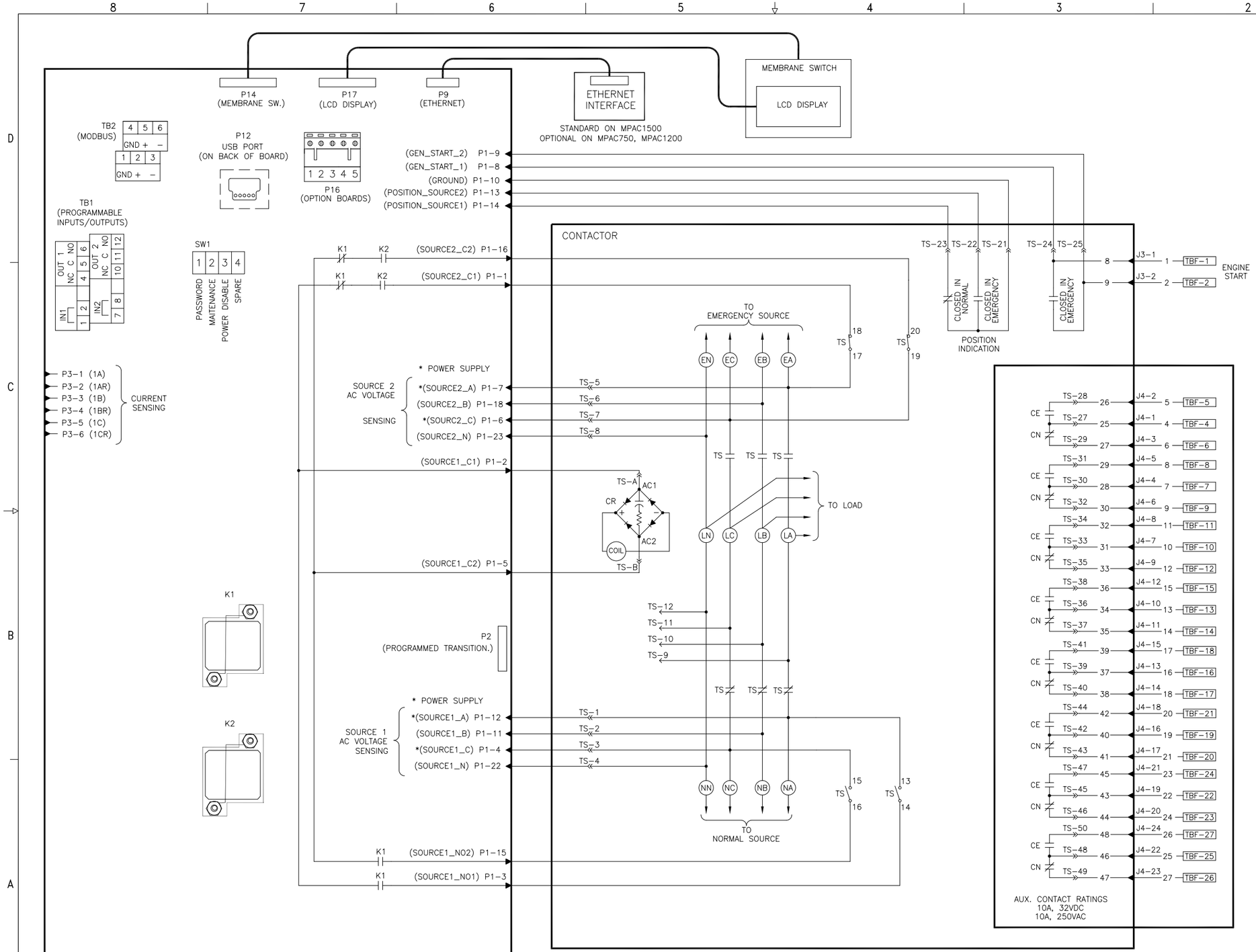

LEGEND

CE – CLOSED IN EMERGENCY
CN – CLOSED IN NORMAL
CR(#) – BRIDGE RECTIFIER
J(#) – CONNECTOR (JACK)
K(#) – RELAY
LCD – LIQUID CRYSTAL DISPLAY
P(#) – CONNECTOR (PLUG)
SW(#) – DIP SWITCH
TB1 – PROGRAMMABLE INPUT/OUTPUT TERMINAL BLOCK
TB2 – MODBUS TERMINAL BLOCK
TBF – FIELD CONNECTION TERMINAL BLOCK
TS – TRANSFER SWITCH

TS (MUS) CONTACTS

TS	SOLENOID POSITION				
	CLOSED	BEFORE TDC>	> <	BEFORE <TDC	CLOSED
13–14				X	X
15–16				X	X
17–18	X	X			
19–20	X	X			

NOTE:
DIAGRAM SHOWN WITH "NORMAL" ENERGIZED AND CONTACTOR IN THE NORMAL POSITION.

MODEL KCS
260–600A & 230A (600V)
STANDARD MECHANISM
STANDARD TRANSITION
FOR 260–600A & 230A (600V) WIRING DIAGRAM SEE GM89646

UNLESS OTHERWISE SPECIFIED – 1) DIMENSIONS ARE IN INCHES 2) TOLERANCES ARE: .XXX± .010 .XX ± .030 .X ± .060 FRACTIONS ± ANGLES ± 1/2° SURFACE FINISH √ MAX.

APPROVALS		DATE
DRAWN	DFS	11–7–13
CHECKED	MTL	11–7–13
APPROVED	HCC	11–7–13

KOHLER CO.
POWER SYSTEMS, KOHLER, WI 53044 U.S.A.
THIS DRAWING, IN DESIGN AND DETAIL, IS KOHLER CO. PROPERTY AND MUST NOT BE USED EXCEPT IN CONNECTION WITH KOHLER CO. WORK. ALL RIGHTS OF DESIGN OR INVENTION ARE RESERVED.

TITLE DIAGRAM, SCHEMATIC
SCALE / / / CAD NO. SHEET 1–1
PLOTTED DWG. NO. GM89645 D

REV	DATE	REVISION	BY	M F
–	11–7–13	NEW DRAWING [CT55090]	DFS	
A	8–14–15	(D–3) TB2 MODBUS CONNECTION VIEW UPDATED; [CT120983]	BTW	

RIGHT SIDE WALL

J4 CONNECTIONS

PIN #					
1	25	(TS–27)	13	37	(TS–39)
2	26	(TS–28)	14	38	(TS–40)
3	27	(TS–29)	15	39	(TS–41)
4	28	(TS–30)	16	40	(TS–42)
5	29	(TS–31)	17	41	(TS–43)
6	30	(TS–32)	18	42	(TS–44)
7	31	(TS–33)	19	43	(TS–45)
8	32	(TS–34)	20	44	(TS–46)
9	33	(TS–35)	21	45	(TS–47)
10	34	(TS–36)	22	46	(TS–48)
11	35	(TS–37)	23	47	(TS–49)
12	36	(TS–38)	24	48	(TS–50)

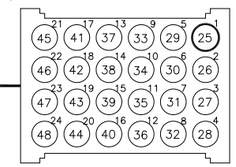

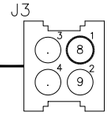

J3 CONNECTIONS

PIN #		
1	8	(TS–24)
2	9	(TS–25)
3	N/C	.
4	N/C	.

AUXILIARY CONTACTS/
ENGINE START
CONNECTIONS

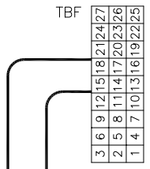

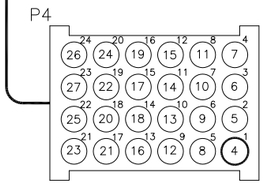

P4 CONNECTIONS (AUXILIARY CONTACTS)

PIN #					
1	4	(TBF–4)	13	16	(TBF–16)
2	5	(TBF–5)	14	18	(TBF–17)
3	6	(TBF–6)	15	17	(TBF–18)
4	7	(TBF–7)	16	19	(TBF–19)
5	8	(TBF–8)	17	21	(TBF–20)
6	9	(TBF–9)	18	20	(TBF–21)
7	10	(TBF–10)	19	22	(TBF–22)
8	11	(TBF–11)	20	24	(TBF–23)
9	12	(TBF–12)	21	23	(TBF–24)
10	13	(TBF–13)	22	25	(TBF–25)
11	14	(TBF–14)	23	27	(TBF–26)
12	15	(TBF–15)	24	26	(TBF–27)

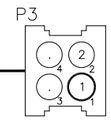

P3 CONNECTIONS (ENGINE START)

PIN #		
1	1	(TBF–1)
2	2	(TBF–2)
3	N/C	.
4	N/C	.

DOOR

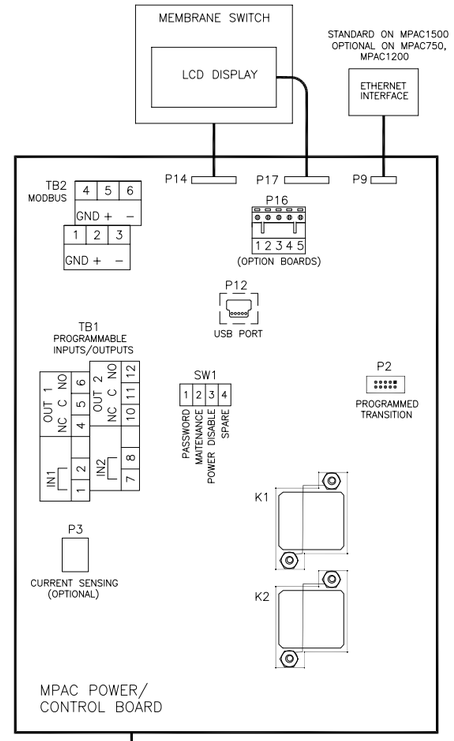

LEGEND

J(#) – CONNECTOR (JACK)
K(#) – RELAY
P(#) – CONNECTOR (PLUG)
SW(#) – DIP SWITCH
TB1 – PROGRAMMABLE INPUT/OUTPUT TERMINAL BLOCK
TB2 – MODBUS TERMINAL BLOCK
TBF – FIELD CONNECTION TERMINAL BLOCK
TS – TRANSFER SWITCH

ENCLOSURE

TS
VIEW FROM INSIDE FRONT

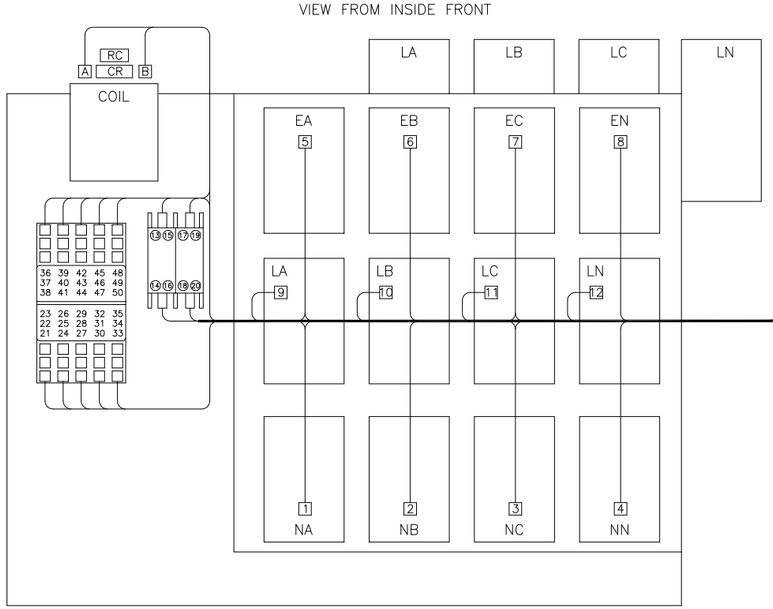

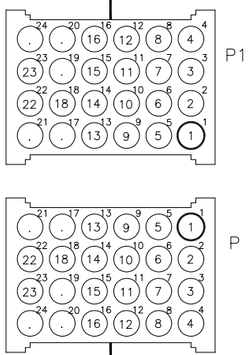

P CONNECTIONS (CONTACTOR TO MAIN LOGIC BOARD)

1	1	(TS–8)	13	13	(TS–16)
2	2	(TS–A)	14	14	(TS–18)
3	3	(TS–6)	15	15	(TS–70)
4	4	(TS–3)	16	16	(TS–72)
5	5	(TS–B)	17	N/C	.
6	6	(TS–5)	18	25	(TS–19)
7	7	(TS–4)	19	26	(TS–20)
8	8	(TB/TS–14)	20	27	(TS–21)
9	9	(TB/TS–15)	21	28	(TS–22)
10	10	(TS–17)	22	29	(TS–NN)
11	11	(TS–2)	23	30	(TS–EN)
12	12	(TS–1)	24	31	(TS–LN)

MODEL KCS
260–600A & 230A (600V)
STANDARD MECHANISM
STANDARD TRANSITION
FOR 260–600A & 230A (600V) SCHEMATIC DIAGRAM SEE GM89645

UNLESS OTHERWISE SPECIFIED –
1) DIMENSIONS ARE IN INCHES
2) TOLERANCES ARE:
.XXX ± .010 ANGLES ± 1/2°
.XX ± .030 SURFACE FINISH
.X ± .060 √ MAX.
FRACTIONS ±

APPROVALS		DATE
DRAWN	DFS	11–7–13
CHECKED	MTL	11–7–13
APPROVED	HCC	11–7–13

KOHLER CO.
POWER SYSTEMS, KOHLER, WI 53044 U.S.A.
THIS DRAWING, IN DESIGN AND DETAIL, IS KOHLER CO. PROPERTY AND MUST NOT BE USED EXCEPT IN CONNECTION WITH KOHLER CO. WORK. ALL RIGHTS OF DESIGN OR INVENTION ARE RESERVED.

TITLE DIAGRAM, WIRING
SCALE / / / CAD NO. SHEET 1–1
PLOTTED DWG. NO. GM89646 D

REV	DATE	REVISION	BY	M F
–	11–7–13	NEW DRAWING [CT55090]	DFS	
A	8–14–15	(D–8) TB2 MODBUS CONNECTION VIEW UPDATED; [CT120983]	BTW	

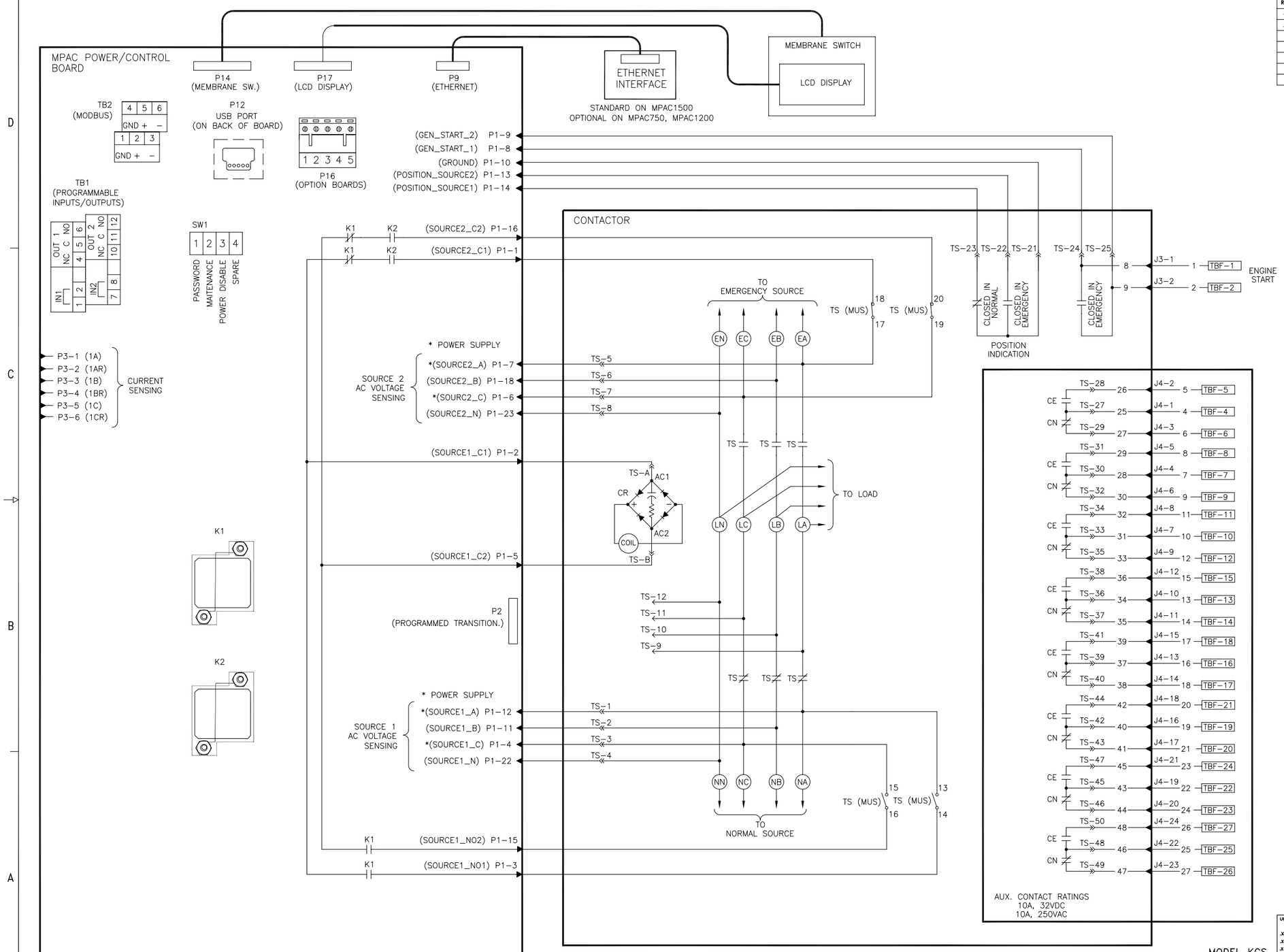

LEGEND

CE – CLOSED IN EMERGENCY
CN – CLOSED IN NORMAL
CR(#) – BRIDGE RECTIFIER
J(#) – CONNECTOR (JACK)
K(#) – RELAY
LCD – LIQUID CRYSTAL DISPLAY
P(#) – CONNECTOR (PLUG)
SW(#) – DIP SWITCH
TB1 – PROGRAMMABLE INPUT/OUTPUT TERMINAL BLOCK
TB2 – MODBUS TERMINAL BLOCK
TBF – FIELD CONNECTION TERMINAL BLOCK
TS – TRANSFER SWITCH

TS (MUS) CONTACTS

TS	SOLENOID POSITION				
	NORM	BEFORE TDC>	> <	BEFORE <TDC	EMER
13–14				X	X
15–16				X	X
17–18	X	X			
19–20	X	X			

NOTE:
DIAGRAM SHOWN WITH "NORMAL" ENERGIZED AND CONTACTOR IN THE NORMAL POSITION.

MODEL KCS
800–1200A
STANDARD MECHANISM
STANDARD TRANSITION
FOR WIRING DIAGRAM SEE GM89648

UNLESS OTHERWISE SPECIFIED –
1) DIMENSIONS ARE IN INCHES
2) TOLERANCES ARE:
.XXX± .010 ANGLES± 1/2°
.XX ± .030 SURFACE FINISH
.X ± .060 MAX.
FRACTIONS ±

APPROVALS		DATE
DRAWN	DFS	11–7–13
CHECKED	MTL	11–7–13
APPROVED	HCC	11–7–13

KOHLER CO.
POWER SYSTEMS, KOHLER, WI 53044 U.S.A.
THIS DRAWING, IN DESIGN AND DETAIL, IS KOHLER CO. PROPERTY AND MUST NOT BE USED EXCEPT IN CONNECTION WITH KOHLER CO. WORK. ALL RIGHTS OF DESIGN OR INVENTION ARE RESERVED.

TITLE DIAGRAM, SCHEMATIC
SCALE / / / CAD NO. SHEET 1–1
PLOTTED DWG. NO. GM89647 D

REV	DATE	REVISION	BY	M F
–	11–2–13	NEW DRAWING [CT55090]	DFS	
A	8–14–15	(D–3) TB2 MODBUS CONNECTION VIEW UPDATED; [CT120983]	BTW	

RIGHT SIDE WALL

J4 CONNECTIONS

PIN					
#1	25	(TS–27)	13	37	(TS–39)
2	26	(TS–28)	14	38	(TS–40)
3	27	(TS–29)	15	39	(TS–41)
4	28	(TS–30)	16	40	(TS–42)
5	29	(TS–31)	17	41	(TS–43)
6	30	(TS–32)	18	42	(TS–44)
7	31	(TS–33)	19	43	(TS–45)
8	32	(TS–34)	20	44	(TS–46)
9	33	(TS–35)	21	45	(TS–47)
10	34	(TS–36)	22	46	(TS–48)
11	35	(TS–37)	23	47	(TS–49)
12	36	(TS–38)	24	48	(TS–50)

AUXILIARY CONTACTS/
ENGINE START
CONNECTIONS

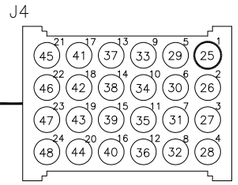

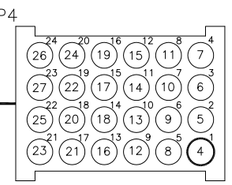

P4 CONNECTIONS (AUXILIARY CONTACTS)

PIN					
#1	4	(TBF–4)	13	16	(TBF–16)
2	5	(TBF–5)	14	18	(TBF–17)
3	6	(TBF–6)	15	17	(TBF–18)
4	7	(TBF–7)	16	19	(TBF–19)
5	8	(TBF–8)	17	21	(TBF–20)
6	9	(TBF–9)	18	20	(TBF–21)
7	10	(TBF–10)	19	22	(TBF–22)
8	11	(TBF–11)	20	24	(TBF–23)
9	12	(TBF–12)	21	23	(TBF–24)
10	13	(TBF–13)	22	25	(TBF–25)
11	14	(TBF–14)	23	27	(TBF–26)
12	15	(TBF–15)	24	26	(TBF–27)

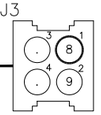

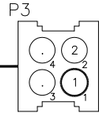

P3 CONNECTIONS (ENGINE START)

PIN		
#1	1	(TBF–1)
2	2	(TBF–2)
3	N/C	.
4	N/C	.

J3 CONNECTIONS

PIN		
#1	8	(TS–24)
2	9	(TS–25)
3	N/C	.
4	N/C	.

ENCLOSURE

TS
VIEW FROM INSIDE FRONT

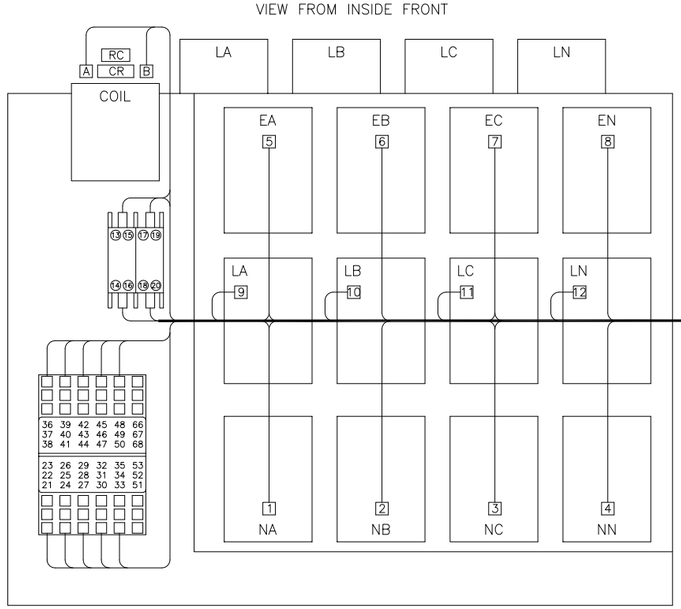

DOOR

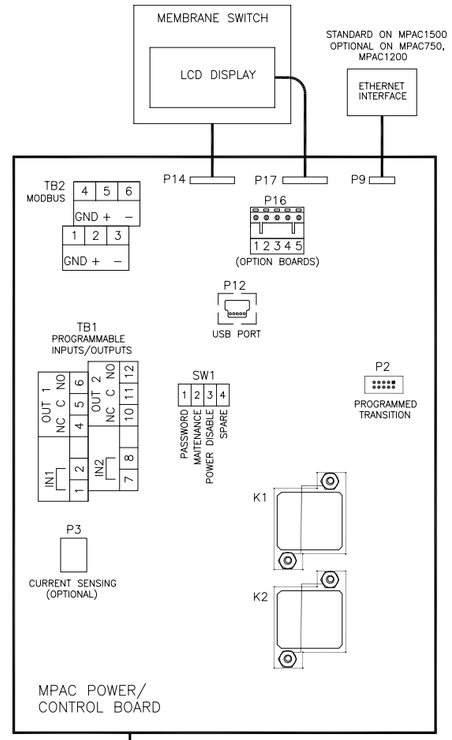

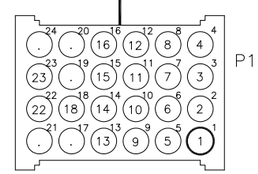

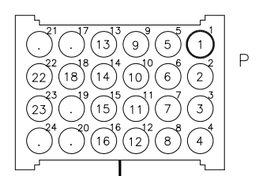

P CONNECTIONS (CONTACTOR TO MAIN LOGIC BOARD)

1	1	(TS–18)	13	13	(TS–22)
2	2	(TS–A)	14	14	(TS–23)
3	3	(TS–14)	15	15	(TS–16)
4	4	(TS–3)	16	16	(TS–20)
5	5	(TS–B)	17	N/C	.
6	6	(TS–7)	18	18	(TS–6)
7	7	(TS–5)	19	N/C	.
8	8	(TS–24)	20	N/C	.
9	9	(TS–25)	21	N/C	(TS–11)
10	10	(TS–21)	22	22	(TS–4)
11	11	(TS–2)	23	23	(TS–8)
12	12	(TS–1)	24	N/C	.

LEGEND

J(#) – CONNECTOR (JACK)
K(#) – RELAY
P(#) – CONNECTOR (PLUG)
SW(#) – DIP SWITCH
TB1 – PROGRAMMABLE INPUT/OUTPUT TERMINAL BLOCK
TB2 – MODBUS TERMINAL BLOCK
TBF – FIELD CONNECTION TERMINAL BLOCK
TS – TRANSFER SWITCH

MODEL KCS
800–1200A
STANDARD MECHANISM
STANDARD TRANSITION
FOR SCHEMATIC DIAGRAM SEE GM89647

UNLESS OTHERWISE SPECIFIED –
1) DIMENSIONS ARE IN INCHES
2) TOLERANCES ARE:
.XXX± .010 ANGLES± 1/2°
.XX ± .030 SURFACE FINISH
.X ± .060 √ MAX.
FRACTIONS ±

APPROVALS		DATE
DRAWN	DFS	11–20–13
CHECKED	MTL	11–20–13
APPROVED	HCC	11–20–13

KOHLER CO.
POWER SYSTEMS, KOHLER, WI 53044 U.S.A.
THIS DRAWING, IN DESIGN AND DETAIL, IS KOHLER CO. PROPERTY AND MUST NOT BE USED EXCEPT IN CONNECTION WITH KOHLER CO. WORK. ALL RIGHTS OF DESIGN OR INVENTION ARE RESERVED.

TITLE DIAGRAM, WIRING

SCALE / / / | CAD NO. | SHEET 1–1
PLOTTED | DWG. NO. GM89648 | D

REV	DATE	REVISION	BY	M F
–	11-7-13	NEW DRAWING [CT55090]	DFS	
A	8-14-15	(D-8) TB2 MODBUS CONNECTION VIEW UPDATED. [CT120983]	BTW	

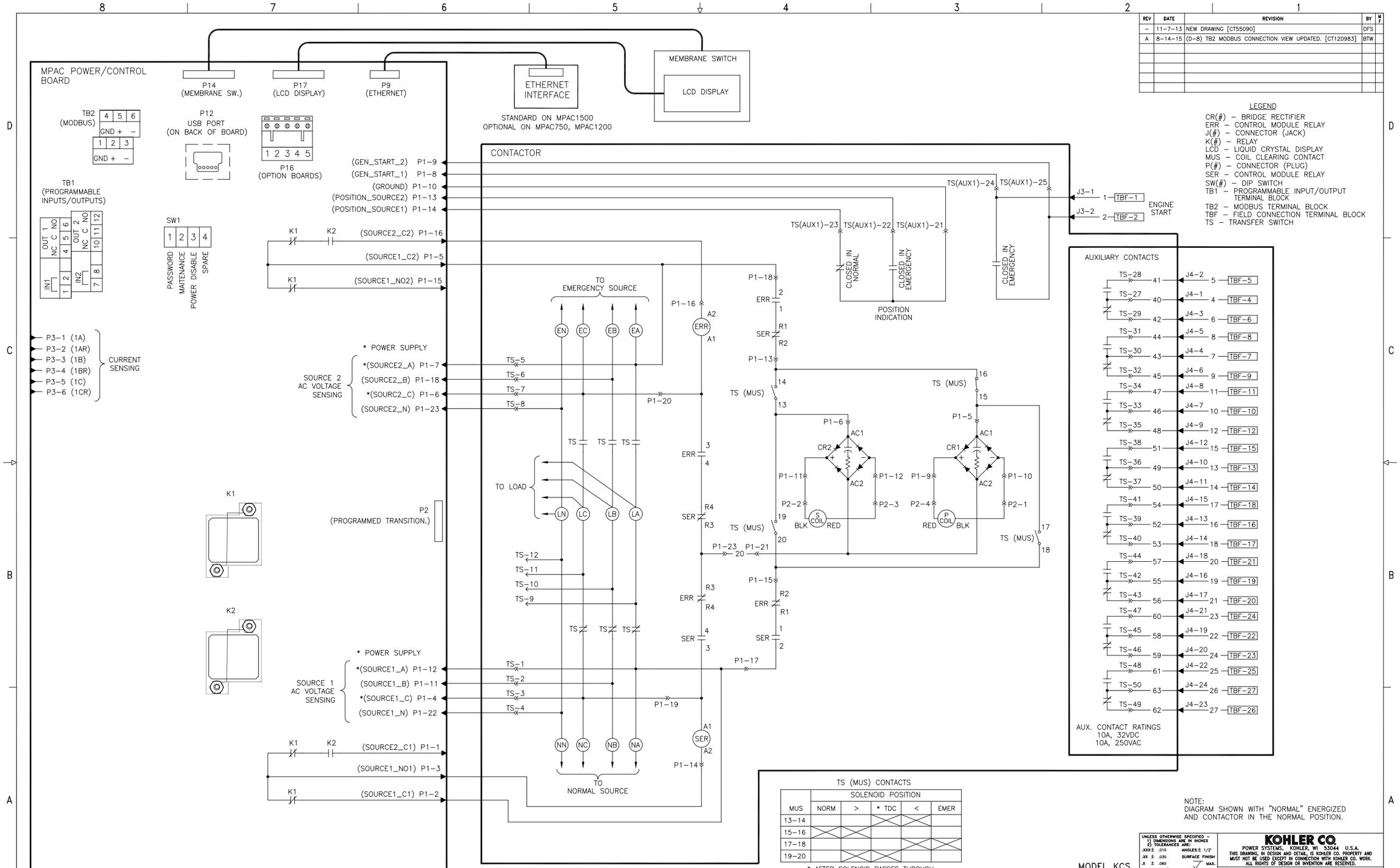

LEGEND

CR(#) – BRIDGE RECTIFIER
ERR – CONTROL MODULE RELAY
J(#) – CONNECTOR (JACK)
K(#) – RELAY
LCD – LIQUID CRYSTAL DISPLAY
MUS – COIL CLEARING CONTACT
P(#) – CONNECTOR (PLUG)
SER – CONTROL MODULE RELAY
SW(#) – DIP SWITCH
TB1 – PROGRAMMABLE INPUT/OUTPUT TERMINAL BLOCK
TB2 – MODBUS TERMINAL BLOCK
TBF – FIELD CONNECTION TERMINAL BLOCK
TS – TRANSFER SWITCH

TS (MUS) CONTACTS

MUS	SOLENOID POSITION NORM	>	* TDC	<	EMER
13–14			X	X	
15–16	X	X			
17–18				X	X
19–20		X	X		

* AFTER SOLENOID PASSES THROUGH TOP DEAD CENTER POSITION.

NOTE:
DIAGRAM SHOWN WITH "NORMAL" ENERGIZED AND CONTACTOR IN THE NORMAL POSITION.

MODEL KCS
1600-4000A
STANDARD MECHANISM
STANDARD TRANSITION
FOR WIRING DIAGRAM SEE GM89650

UNLESS OTHERWISE SPECIFIED – 1) DIMENSIONS ARE IN INCHES 2) TOLERANCES ARE: .XXX ± .010 ANGLES ± 1/2° .XX ± .030 SURFACE FINISH .X ± .060 MAX. FRACTIONS ±

APPROVALS		DATE
DRAWN	DFS	11-7-13
CHECKED	MTL	11-7-13
APPROVED	HCC	11-7-13

KOHLER CO.
POWER SYSTEMS, KOHLER, WI 53044 U.S.A.
THIS DRAWING, IN DESIGN AND DETAIL, IS KOHLER CO. PROPERTY AND MUST NOT BE USED EXCEPT IN CONNECTION WITH KOHLER CO. WORK. ALL RIGHTS OF DESIGN OR INVENTION ARE RESERVED.

TITLE: DIAGRAM, SCHEMATIC
SCALE / / / | CAD NO. | SHEET 1-1
PLOTTED | DWG. NO. GM89649 | D

REV	DATE	REVISION	BY	M F
–	11–20–13	NEW DRAWING [CT55090]	DFS	
A	8–14–15	(D–3) TB2 MODBUS CONNECTION VIEW UPDATED; [CT120983]	BTW	

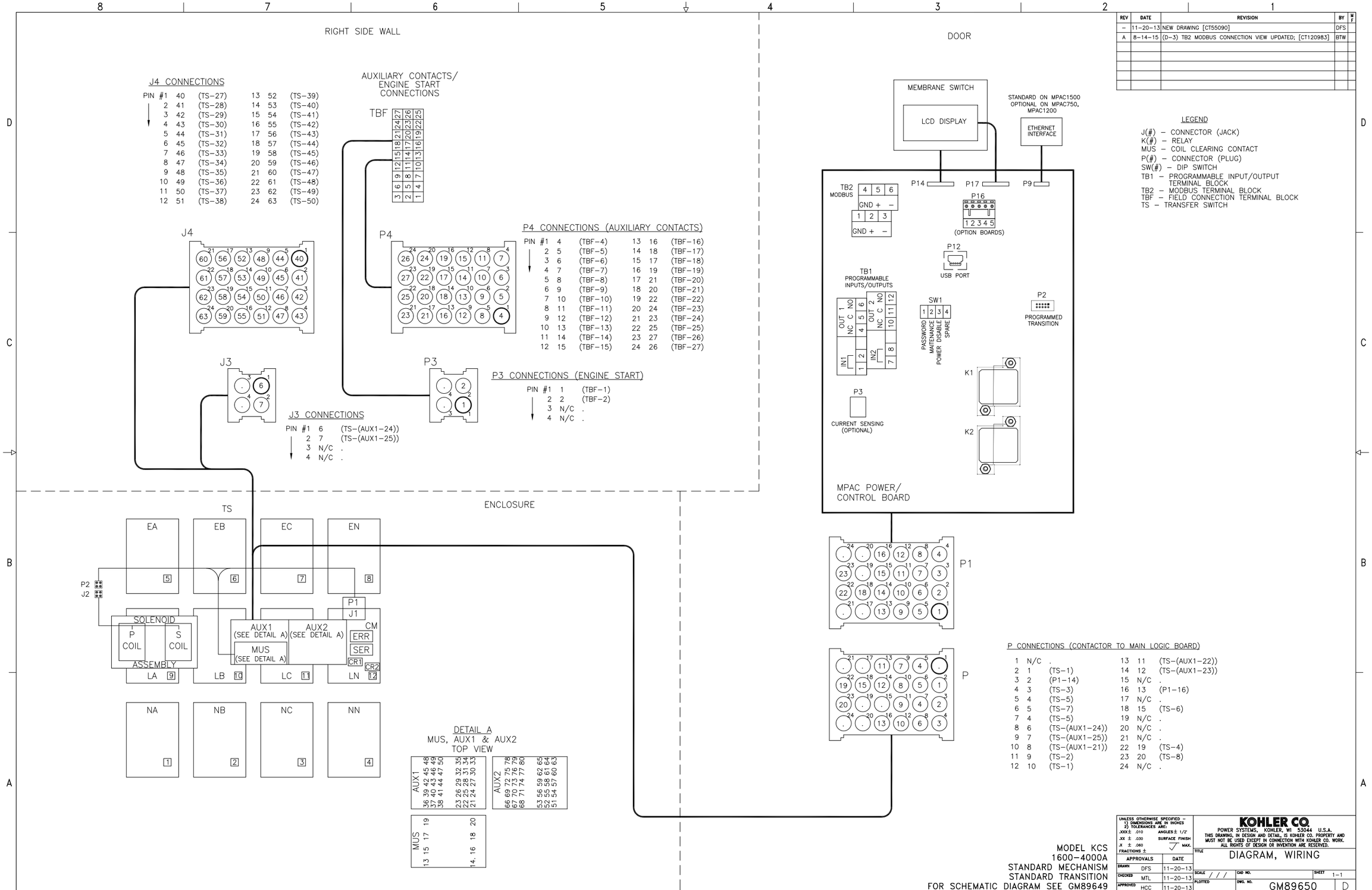

LEGEND

J(#) – CONNECTOR (JACK)
K(#) – RELAY
MUS – COIL CLEARING CONTACT
P(#) – CONNECTOR (PLUG)
SW(#) – DIP SWITCH
TB1 – PROGRAMMABLE INPUT/OUTPUT TERMINAL BLOCK
TB2 – MODBUS TERMINAL BLOCK
TBF – FIELD CONNECTION TERMINAL BLOCK
TS – TRANSFER SWITCH

P CONNECTIONS (CONTACTOR TO MAIN LOGIC BOARD)

1	N/C	.	13	11	(TS–(AUX1–22))
2	1	(TS–1)	14	12	(TS–(AUX1–23))
3	2	(P1–14)	15	N/C	.
4	3	(TS–3)	16	13	(P1–16)
5	4	(TS–5)	17	N/C	.
6	5	(TS–7)	18	15	(TS–6)
7	4	(TS–5)	19	N/C	.
8	6	(TS–(AUX1–24))	20	N/C	.
9	7	(TS–(AUX1–25))	21	N/C	.
10	8	(TS–(AUX1–21))	22	19	(TS–4)
11	9	(TS–2)	23	20	(TS–8)
12	10	(TS–1)	24	N/C	.

MODEL KCS
1600–4000A
STANDARD MECHANISM
STANDARD TRANSITION
FOR SCHEMATIC DIAGRAM SEE GM89649

UNLESS OTHERWISE SPECIFIED –
1) DIMENSIONS ARE IN INCHES
2) TOLERANCES ARE:
.XXX± .010 ANGLES± 1/2°
.XX ± .030 SURFACE FINISH
.X ± .060 √ MAX.
FRACTIONS ±

APPROVALS		DATE
DRAWN	DFS	11–20–13
CHECKED	MTL	11–20–13
APPROVED	HCC	11–20–13

KOHLER CO.
POWER SYSTEMS, KOHLER, WI 53044 U.S.A.

THIS DRAWING, IN DESIGN AND DETAIL, IS KOHLER CO. PROPERTY AND MUST NOT BE USED EXCEPT IN CONNECTION WITH KOHLER CO. WORK. ALL RIGHTS OF DESIGN OR INVENTION ARE RESERVED.

TITLE DIAGRAM, WIRING
SCALE / / / CAD NO. SHEET 1–1
PLOTTED DWG. NO. GM89650 D

REV	DATE	REVISION	BY	M F
–	11–7–13	NEW DRAWING [CT55090]	DFS	
A	5–1–14	(C–5) BRIDGE RECTIFIER (BR): MISSING LINE ADDED BETWEEN		
		RESISTOR & AC2 [CT79954]	DFS	
B	8–14–15	(D–8) TB2 MODBUS CONNECTION VIEW UPDATED; [CT120983]	BTW	

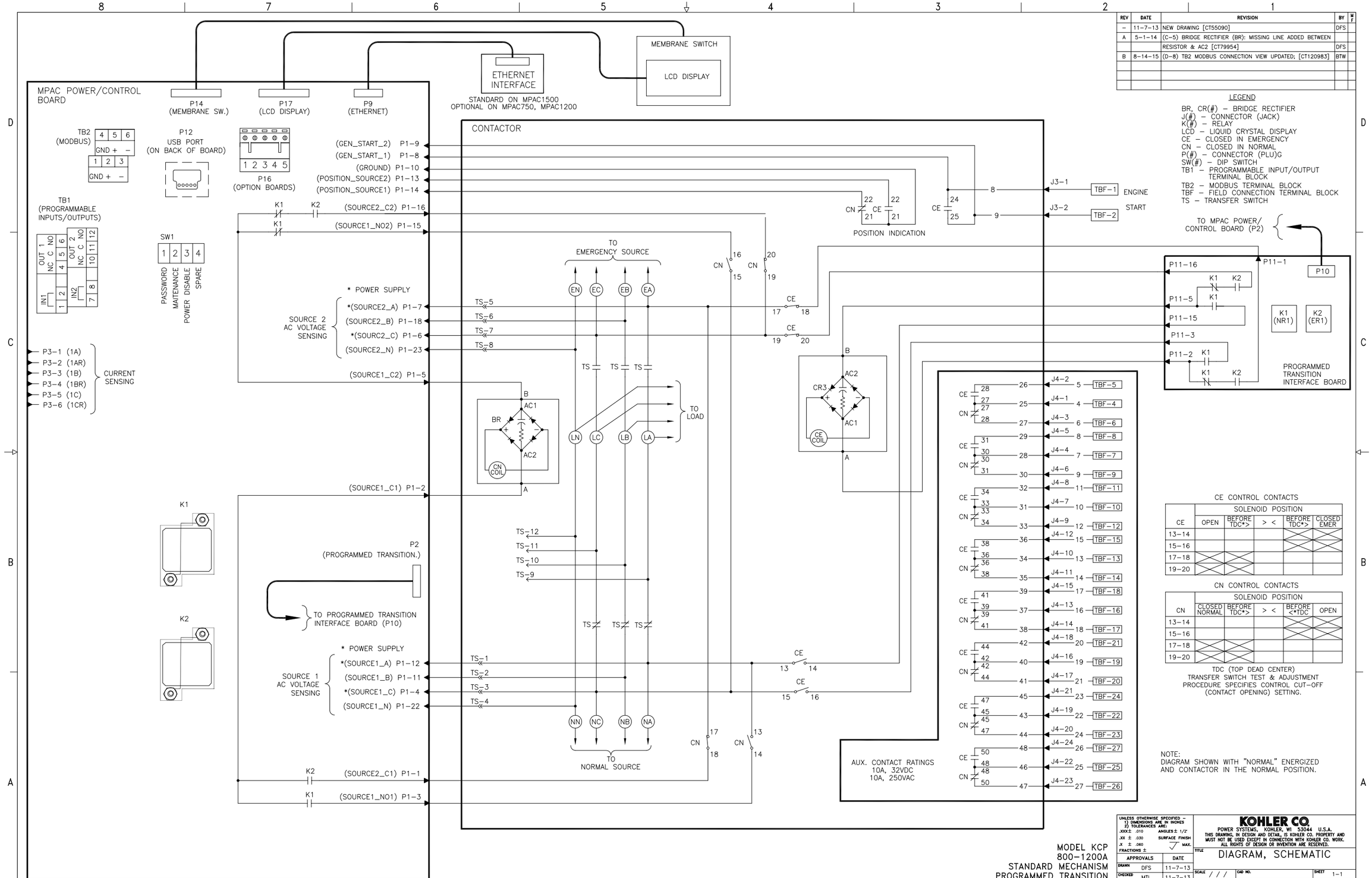

LEGEND

BR, CR(#) – BRIDGE RECTIFIER
J(#) – CONNECTOR (JACK)
K(#) – RELAY
LCD – LIQUID CRYSTAL DISPLAY
CE – CLOSED IN EMERGENCY
CN – CLOSED IN NORMAL
P(#) – CONNECTOR (PLU)G
SW(#) – DIP SWITCH
TB1 – PROGRAMMABLE INPUT/OUTPUT TERMINAL BLOCK
TB2 – MODBUS TERMINAL BLOCK
TBF – FIELD CONNECTION TERMINAL BLOCK
TS – TRANSFER SWITCH

CE CONTROL CONTACTS

CE	SOLENOID POSITION				
	OPEN	BEFORE TDC*>	> <	BEFORE TDC*>	CLOSED EMER
13–14				X	X
15–16				X	X
17–18	X	X			
19–20	X	X			

CN CONTROL CONTACTS

CN	SOLENOID POSITION				
	CLOSED NORMAL	BEFORE TDC*>	> <	BEFORE <*TDC	OPEN
13–14				X	X
15–16				X	X
17–18	X	X			
19–20	X	X			

TDC (TOP DEAD CENTER)
TRANSFER SWITCH TEST & ADJUSTMENT PROCEDURE SPECIFIES CONTROL CUT–OFF (CONTACT OPENING) SETTING.

NOTE:
DIAGRAM SHOWN WITH "NORMAL" ENERGIZED AND CONTACTOR IN THE NORMAL POSITION.

MODEL KCP
800–1200A
STANDARD MECHANISM
PROGRAMMED TRANSITION
FOR WIRING DIAGRAM SEE GM89655

UNLESS OTHERWISE SPECIFIED –
1) DIMENSIONS ARE IN INCHES
2) TOLERANCES ARE:
.XXX ± .010 ANGLES ± 1/2°
.XX ± .030 SURFACE FINISH
.X ± .060 √ MAX.
FRACTIONS ±

APPROVALS		DATE
DRAWN	DFS	11–7–13
CHECKED	MTL	11–7–13
APPROVED	HCC	11–7–13

KOHLER CO.
POWER SYSTEMS, KOHLER, WI 53044 U.S.A.
THIS DRAWING, IN DESIGN AND DETAIL, IS KOHLER CO. PROPERTY AND MUST NOT BE USED EXCEPT IN CONNECTION WITH KOHLER CO. WORK. ALL RIGHTS OF DESIGN OR INVENTION ARE RESERVED.

TITLE DIAGRAM, SCHEMATIC
SCALE / / / CAD NO. SHEET 1–1
PLOTTED DWG. NO. GM89654 D

REV	DATE	REVISION	BY	M F
–	11–20–13	NEW DRAWING [CT55090]	DFS	
A	8–14–15	(D–4) TB2 MODBUS CONNECTION VIEW UPDATED; [CT120983]	BTW	

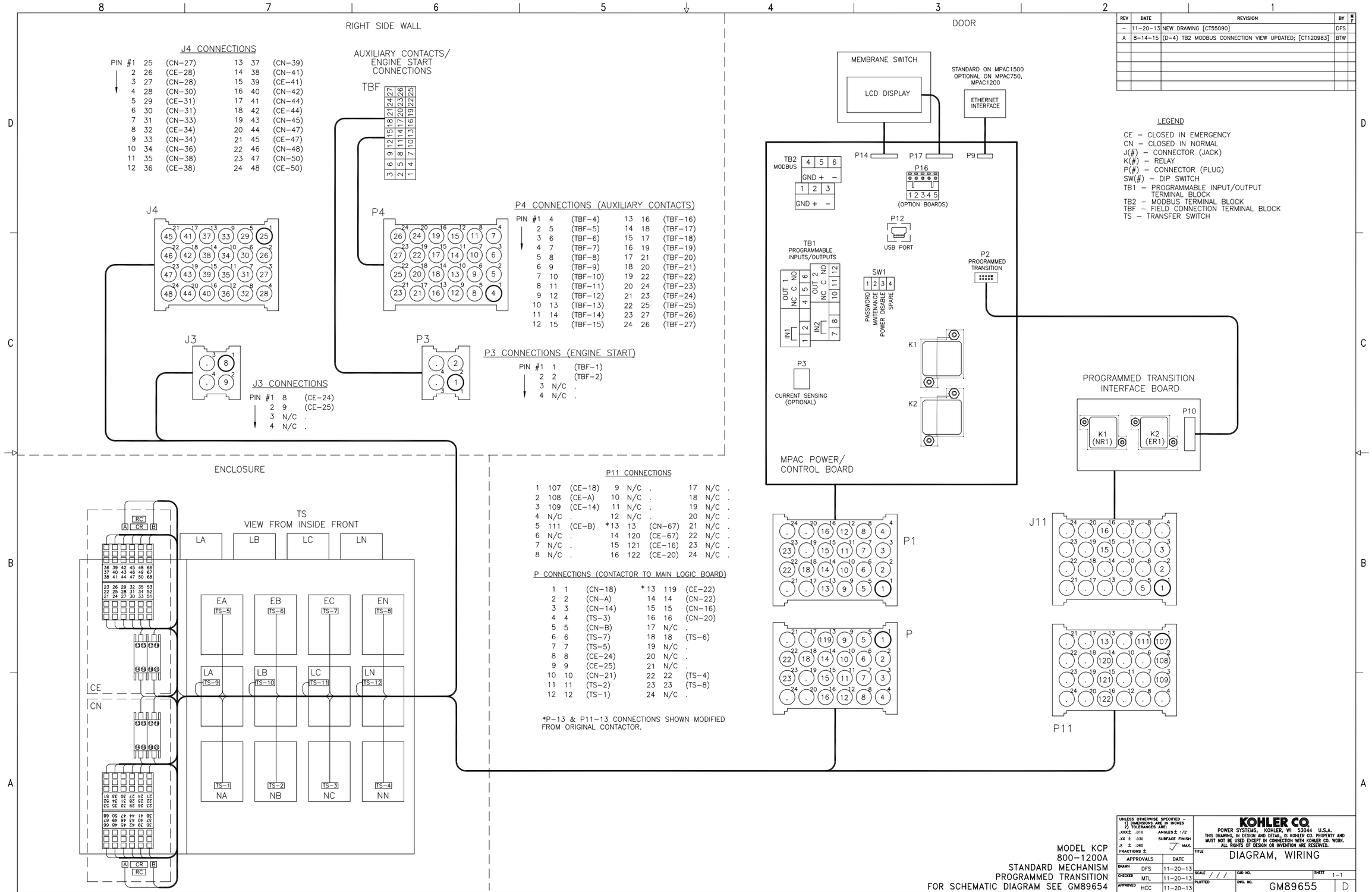

MODEL KCP
800–1200A
STANDARD MECHANISM
PROGRAMMED TRANSITION
FOR SCHEMATIC DIAGRAM SEE GM89654

UNLESS OTHERWISE SPECIFIED – 1) DIMENSIONS ARE IN INCHES 2) TOLERANCES ARE:
.XXX ± .010 ANGLES ± 1/2°
.XX ± .030 SURFACE FINISH
.X ± .060 MAX.
FRACTIONS ±

APPROVALS		DATE
DRAWN	DFS	11–20–13
CHECKED	MTL	11–20–13
APPROVED	HCC	11–20–13

KOHLER CO.
POWER SYSTEMS, KOHLER, WI 53044 U.S.A.
THIS DRAWING, IN DESIGN AND DETAIL, IS KOHLER CO. PROPERTY AND MUST NOT BE USED EXCEPT IN CONNECTION WITH KOHLER CO. WORK. ALL RIGHTS OF DESIGN OR INVENTION ARE RESERVED.

TITLE: DIAGRAM, WIRING

SCALE / / / | CAD NO. | SHEET 1–1 | PLOTTED | DWG. NO. GM89655 | D

REV	DATE	REVISION	BY	M F
–	11–7–13	NEW DRAWING [CT555090]	DFS	
A	5–1–14	(B–5) BRIDGE RECTIFIER (BR): MISSING LINE ADDED BETWEEN		
		RESISTOR & AC2 [CT79954]	DFS	
B	1–22–15	(C–7) P1–15 K1 WAS NC; (C–4) CE 17/19 AND CE 19/20		
		WERE NO; (A–7) ADDED P1–1 K1 [CT103368]	JDH	
C	8–14–15	(D–8) TB2 MODBUS CONNECTION VIEW UPDATED; [CT120983]	BTW	

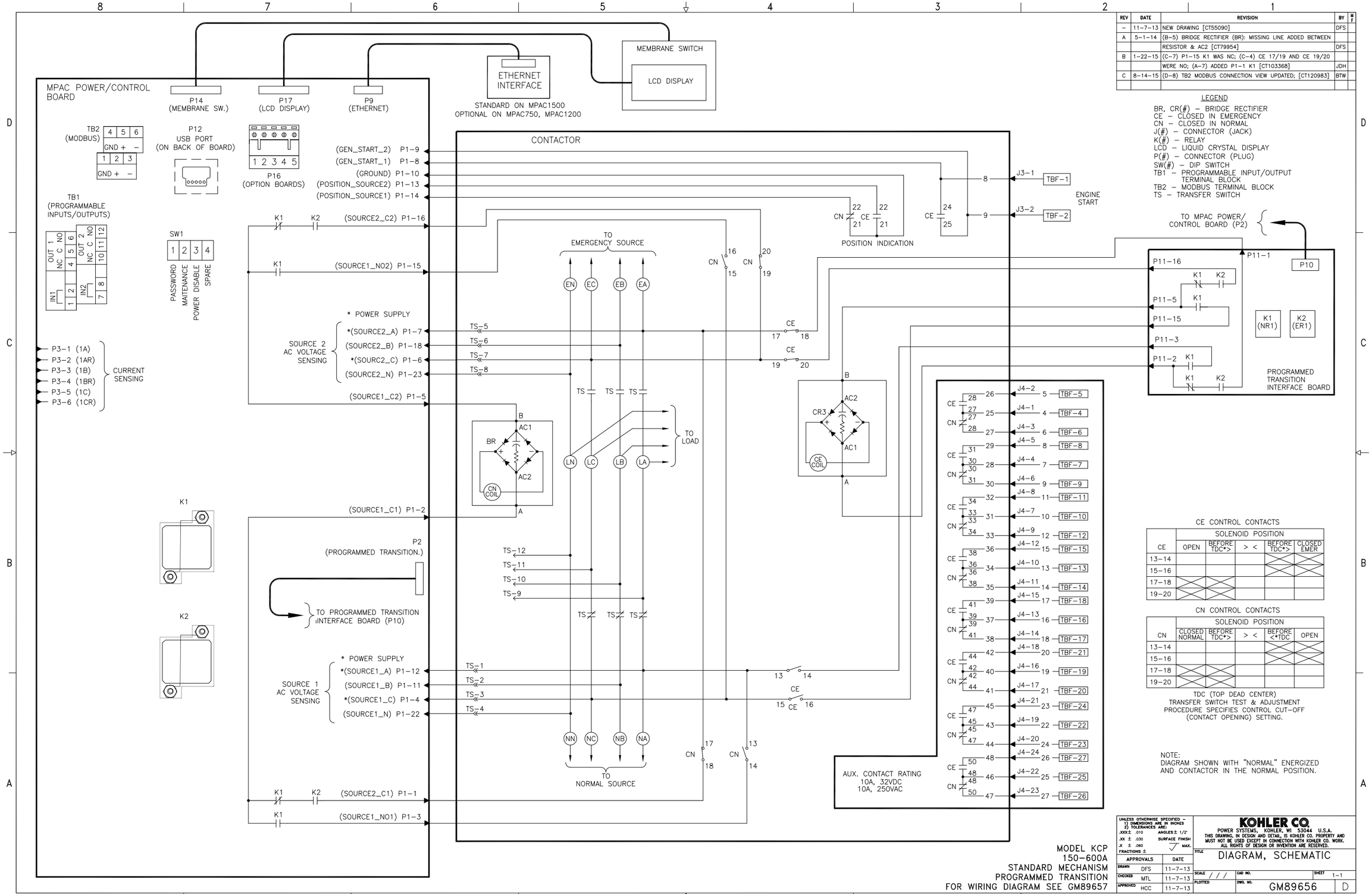

LEGEND

BR, CR(#) – BRIDGE RECTIFIER
CE – CLOSED IN EMERGENCY
CN – CLOSED IN NORMAL
J(#) – CONNECTOR (JACK)
K(#) – RELAY
LCD – LIQUID CRYSTAL DISPLAY
P(#) – CONNECTOR (PLUG)
SW(#) – DIP SWITCH
TB1 – PROGRAMMABLE INPUT/OUTPUT TERMINAL BLOCK
TB2 – MODBUS TERMINAL BLOCK
TS – TRANSFER SWITCH

CE CONTROL CONTACTS

CE	SOLENOID POSITION				
	OPEN	BEFORE TDC*>	> <	BEFORE TDC*>	CLOSED EMER
13–14				X	X
15–16				X	X
17–18	X	X			
19–20	X	X			

CN CONTROL CONTACTS

CN	SOLENOID POSITION				
	CLOSED NORMAL	BEFORE TDC*>	> <	BEFORE <*TDC	OPEN
13–14				X	X
15–16				X	X
17–18	X	X			
19–20	X	X			

TDC (TOP DEAD CENTER)
TRANSFER SWITCH TEST & ADJUSTMENT PROCEDURE SPECIFIES CONTROL CUT–OFF (CONTACT OPENING) SETTING.

NOTE:
DIAGRAM SHOWN WITH "NORMAL" ENERGIZED AND CONTACTOR IN THE NORMAL POSITION.

MODEL KCP
150–600A
STANDARD MECHANISM
PROGRAMMED TRANSITION
FOR WIRING DIAGRAM SEE GM89657

UNLESS OTHERWISE SPECIFIED –
1) DIMENSIONS ARE IN INCHES
2) TOLERANCES ARE:
.XXX± .010 ANGLES± 1/2°
.XX ± .030 SURFACE FINISH
.X ± .060 √ MAX.
FRACTIONS ±

APPROVALS		DATE
DRAWN	DFS	11–7–13
CHECKED	MTL	11–7–13
APPROVED	HCC	11–7–13

KOHLER CO.
POWER SYSTEMS, KOHLER, WI 53044 U.S.A.
THIS DRAWING, IN DESIGN AND DETAIL, IS KOHLER CO. PROPERTY AND MUST NOT BE USED EXCEPT IN CONNECTION WITH KOHLER CO. WORK. ALL RIGHTS OF DESIGN OR INVENTION ARE RESERVED.

TITLE DIAGRAM, SCHEMATIC
SCALE / / / CAD NO. SHEET 1–1
PLOTTED DWG. NO. GM89656 D

REV	DATE	REVISION	BY	M F
–	11–20–13	NEW DRAWING [CT55090]	DFS	
A	8–14–15	(D–3) TB2 MODBUS CONNECTION VIEW UPDATED; [CT120983]	BTW	

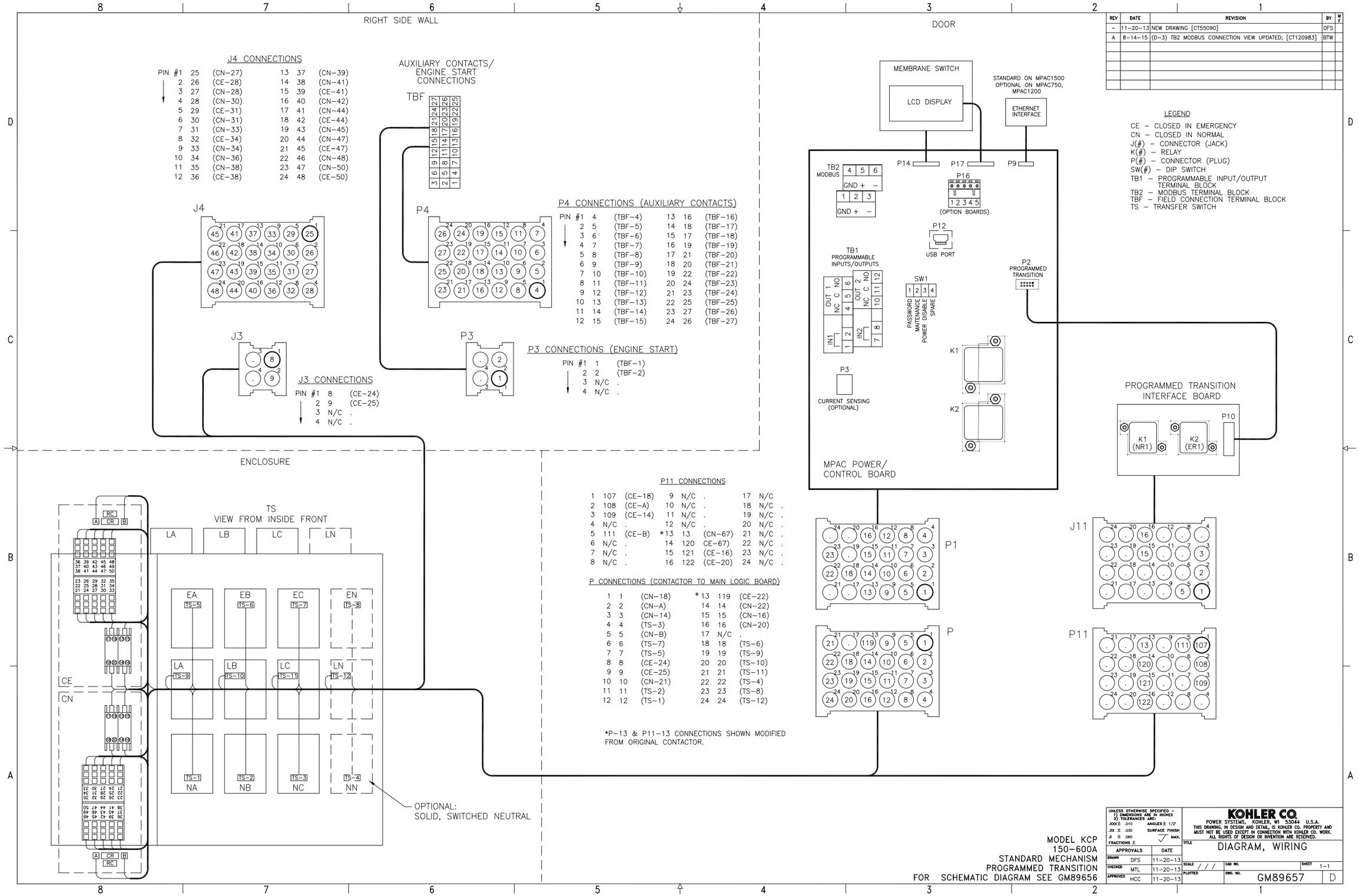

MODEL KCP
150–600A
STANDARD MECHANISM
PROGRAMMED TRANSITION
FOR SCHEMATIC DIAGRAM SEE GM89656

UNLESS OTHERWISE SPECIFIED – 1) DIMENSIONS ARE IN INCHES 2) TOLERANCES ARE:
.XXX ± .010 ANGLES ± 1/2°
.XX ± .030 SURFACE FINISH
.X ± .060 MAX.
FRACTIONS ±

APPROVALS		DATE
DRAWN	DFS	11–20–13
CHECKED	MTL	11–20–13
APPROVED	HCC	11–20–13

KOHLER CO.
POWER SYSTEMS, KOHLER, WI 53044 U.S.A.
THIS DRAWING, IN DESIGN AND DETAIL, IS KOHLER CO. PROPERTY AND MUST NOT BE USED EXCEPT IN CONNECTION WITH KOHLER CO. WORK. ALL RIGHTS OF DESIGN OR INVENTION ARE RESERVED.

TITLE: DIAGRAM, WIRING
SCALE / / / CAD NO. SHEET 1–1
PLOTTED DWG. NO. GM89657 D

REV	DATE	REVISION	BY	M F
–	11–7–13	NEW DRAWING [CT55090]	DFS	
A	5–23–14	(C–3) 600–1200A TEXT REMOVED; [CT82449]	BTW	
B	8–14–15	(D–8) TB2 MODBUS CONNECTION VIEW UPDATED; [CT120983]	BTW	

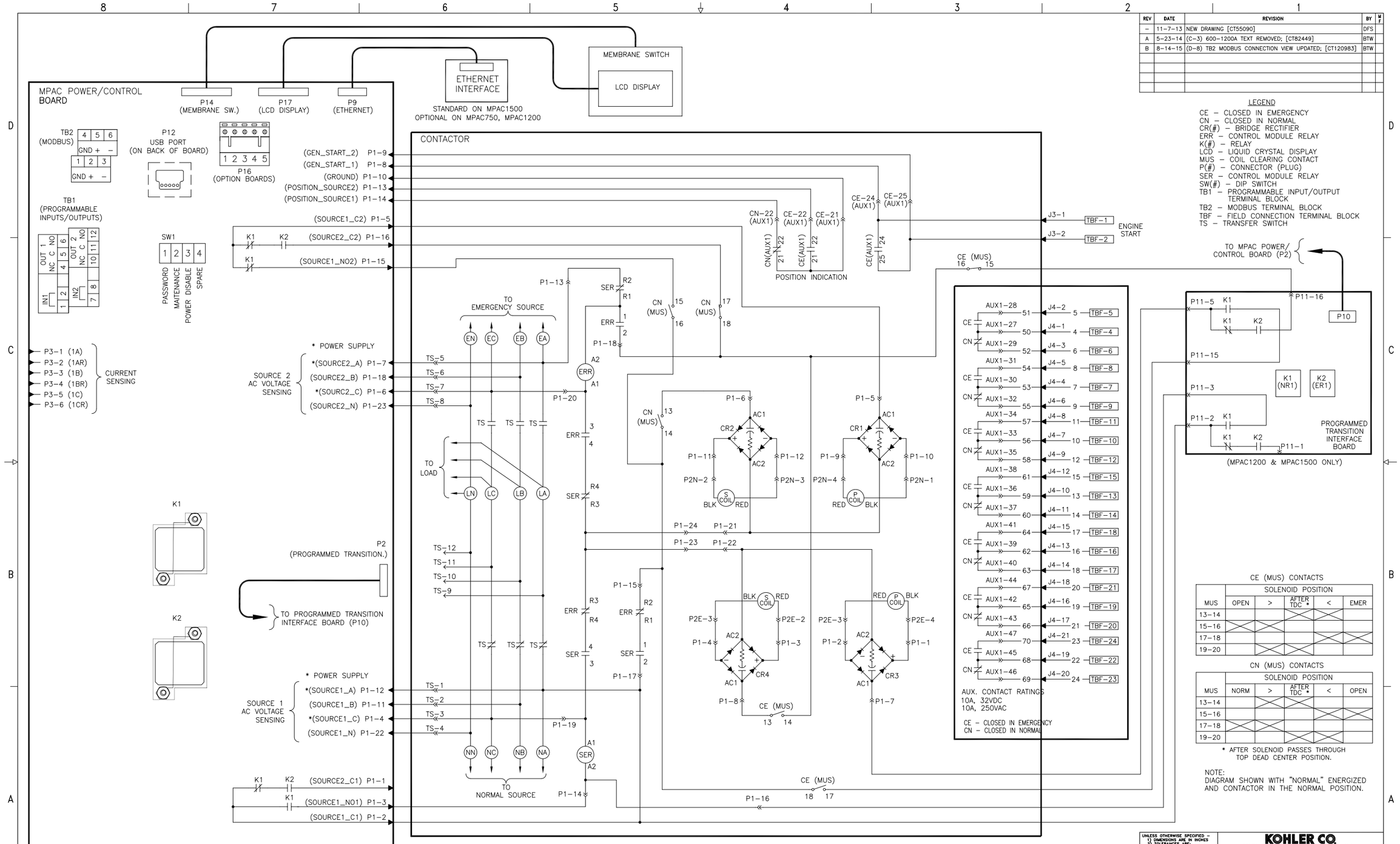

LEGEND

CE – CLOSED IN EMERGENCY
CN – CLOSED IN NORMAL
CR(#) – BRIDGE RECTIFIER
ERR – CONTROL MODULE RELAY
K(#) – RELAY
LCD – LIQUID CRYSTAL DISPLAY
MUS – COIL CLEARING CONTACT
P(#) – CONNECTOR (PLUG)
SER – CONTROL MODULE RELAY
SW(#) – DIP SWITCH
TB1 – PROGRAMMABLE INPUT/OUTPUT TERMINAL BLOCK
TB2 – MODBUS TERMINAL BLOCK
TBF – FIELD CONNECTION TERMINAL BLOCK
TS – TRANSFER SWITCH

CE (MUS) CONTACTS

MUS	SOLENOID POSITION				
	OPEN	>	AFTER TDC *	<	EMER
13–14					
15–16					
17–18					
19–20					

CN (MUS) CONTACTS

MUS	SOLENOID POSITION				
	NORM	>	AFTER TDC *	<	OPEN
13–14					
15–16					
17–18					
19–20					

* AFTER SOLENOID PASSES THROUGH TOP DEAD CENTER POSITION.

NOTE:
DIAGRAM SHOWN WITH "NORMAL" ENERGIZED AND CONTACTOR IN THE NORMAL POSITION.

MODEL KCP
1600–4000A
STANDARD MECHANISM
PROGRAMMED TRANSITION
FOR WIRING DIAGRAM SEE GM89659

UNLESS OTHERWISE SPECIFIED –
1) DIMENSIONS ARE IN INCHES
2) TOLERANCES ARE:
.XXX± .010 ANGLES± 1/2°
.XX ± .030 SURFACE FINISH
.X ± .060 √ MAX.
FRACTIONS ±

APPROVALS		DATE
DRAWN	DFS	11–7–13
CHECKED	MTL	11–7–13
APPROVED	HCC	11–7–13

KOHLER CO.
POWER SYSTEMS, KOHLER, WI 53044 U.S.A.
THIS DRAWING, IN DESIGN AND DETAIL, IS KOHLER CO. PROPERTY AND MUST NOT BE USED EXCEPT IN CONNECTION WITH KOHLER CO. WORK. ALL RIGHTS OF DESIGN OR INVENTION ARE RESERVED.

TITLE DIAGRAM, SCHEMATIC

SCALE / / / | CAD NO. | SHEET 1–1 | PLOTTED | DWG. NO. GM89658 | D

REV	DATE	REVISION	BY	M F
–	11–20–13	NEW DRAWING [CT555090]	DFS	
A	8–14–15	(D–3) TB2 MODBUS CONNECTION VIEW UPDATED; [CT120983]	BTW	

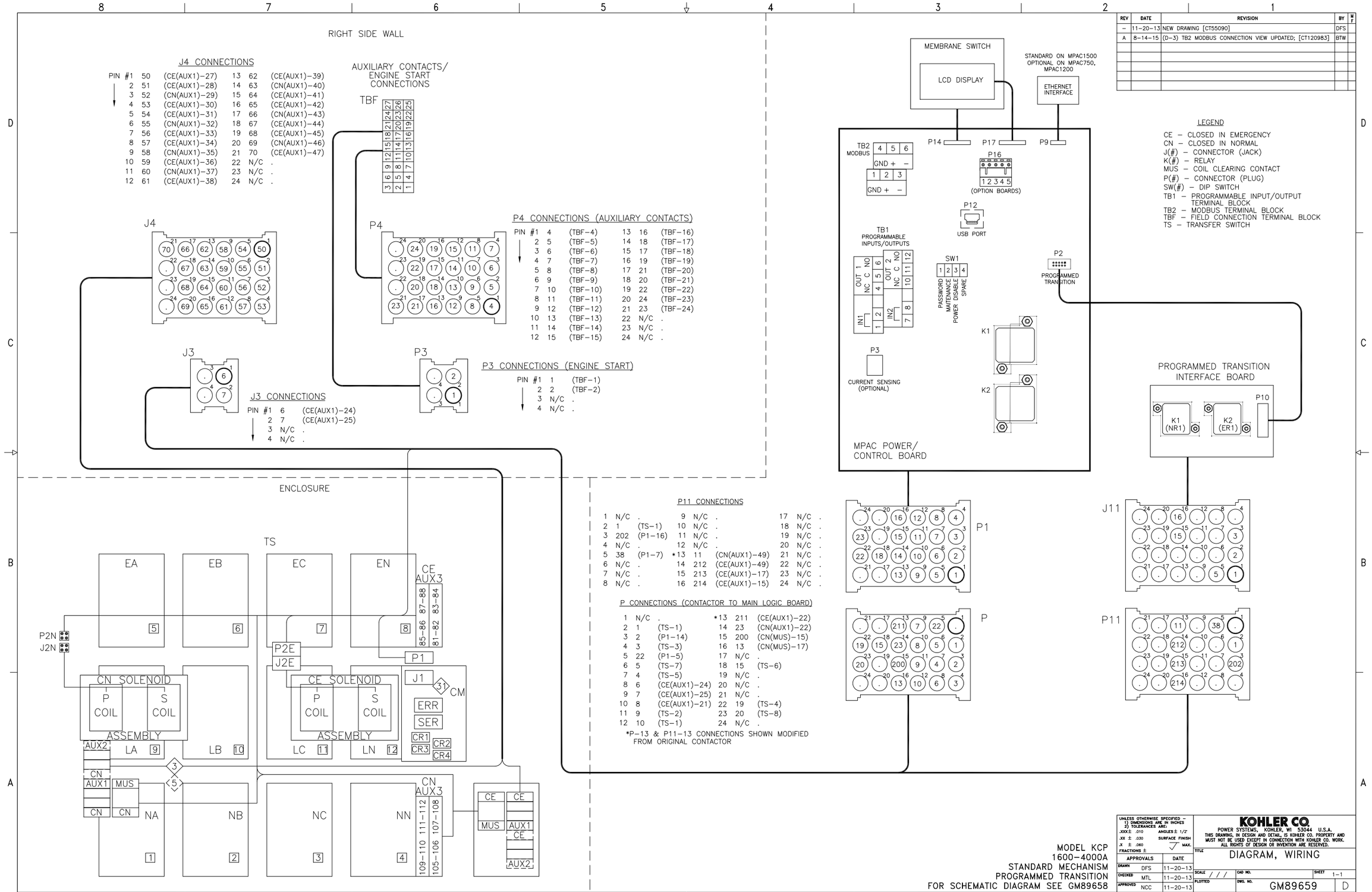

MODEL KCP
1600–4000A
STANDARD MECHANISM
PROGRAMMED TRANSITION
FOR SCHEMATIC DIAGRAM SEE GM89658

UNLESS OTHERWISE SPECIFIED – 1) DIMENSIONS ARE IN INCHES 2) TOLERANCES ARE:
.XXX ± .010 ANGLES ± 1/2°
.XX ± .030 SURFACE FINISH
.X ± .060 MAX.
FRACTIONS ±

APPROVALS		DATE
DRAWN	DFS	11–20–13
CHECKED	MTL	11–20–13
APPROVED	NCC	11–20–13

KOHLER CO.
POWER SYSTEMS, KOHLER, WI 53044 U.S.A.
THIS DRAWING, IN DESIGN AND DETAIL, IS KOHLER CO. PROPERTY AND MUST NOT BE USED EXCEPT IN CONNECTION WITH KOHLER CO. WORK. ALL RIGHTS OF DESIGN OR INVENTION ARE RESERVED.

TITLE: DIAGRAM, WIRING
SCALE: / / / SHEET 1–1
CAD NO.
PLOTTED
DWG. NO. GM89659 D

REV	DATE	REVISION	BY	M F
–	11–7–13	NEW DRAWING [CT55090]	DFS	
A	5–1–14	(C–6) BRIDGE RECTIFIER (BR): MISSING LINE ADDED BETWEEN		
		RESISTOR & AC2 [CT79954]	DFS	
B	8–17–15	(D–8) TB2 MODBUS CONNECTION VIEW UPDATED; [CT120983]	BTW	

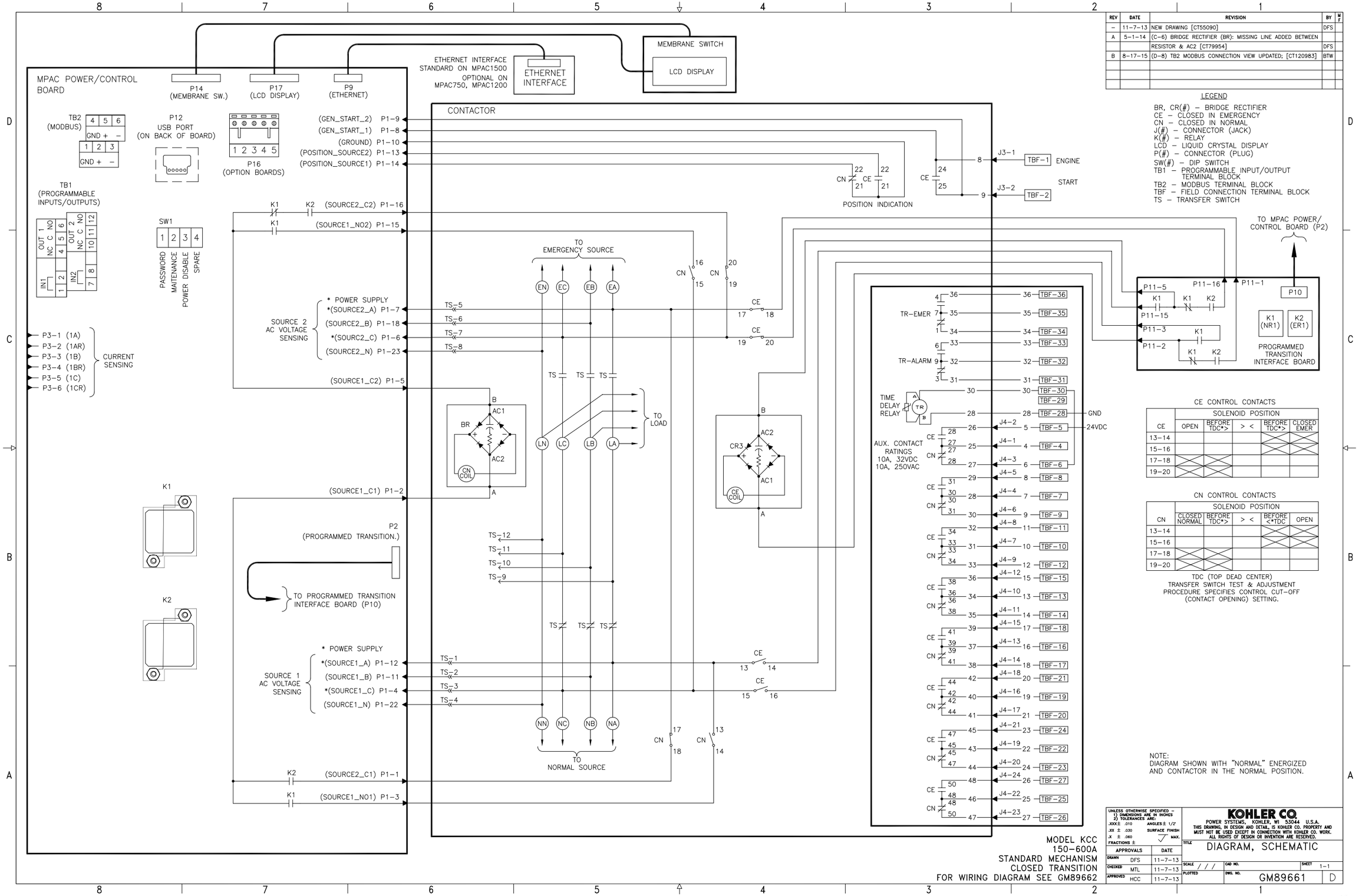

LEGEND

BR, CR(#) – BRIDGE RECTIFIER
CE – CLOSED IN EMERGENCY
CN – CLOSED IN NORMAL
J(#) – CONNECTOR (JACK)
K(#) – RELAY
LCD – LIQUID CRYSTAL DISPLAY
P(#) – CONNECTOR (PLUG)
SW(#) – DIP SWITCH
TB1 – PROGRAMMABLE INPUT/OUTPUT TERMINAL BLOCK
TB2 – MODBUS TERMINAL BLOCK
TBF – FIELD CONNECTION TERMINAL BLOCK
TS – TRANSFER SWITCH

CE CONTROL CONTACTS

CE	SOLENOID POSITION				
	OPEN	BEFORE TDC*>	> <	BEFORE TDC*>	CLOSED EMER
13–14				X	X
15–16				X	X
17–18	X	X			
19–20	X	X			

CN CONTROL CONTACTS

CN	SOLENOID POSITION				
	CLOSED NORMAL	BEFORE TDC*>	> <	BEFORE <*TDC	OPEN
13–14				X	X
15–16				X	X
17–18	X	X			
19–20	X	X			

TDC (TOP DEAD CENTER)
TRANSFER SWITCH TEST & ADJUSTMENT PROCEDURE SPECIFIES CONTROL CUT–OFF (CONTACT OPENING) SETTING.

NOTE:
DIAGRAM SHOWN WITH "NORMAL" ENERGIZED AND CONTACTOR IN THE NORMAL POSITION.

UNLESS OTHERWISE SPECIFIED –
1) DIMENSIONS ARE IN INCHES
2) TOLERANCES ARE:
.XXX± .010 ANGLES± 1/2°
.XX ± .030 SURFACE FINISH
.X ± .060 √ MAX.
FRACTIONS ±

APPROVALS		DATE
DRAWN	DFS	11–7–13
CHECKED	MTL	11–7–13
APPROVED	HCC	11–7–13

KOHLER CO.
POWER SYSTEMS, KOHLER, WI 53044 U.S.A.
THIS DRAWING, IN DESIGN AND DETAIL, IS KOHLER CO. PROPERTY AND MUST NOT BE USED EXCEPT IN CONNECTION WITH KOHLER CO. WORK.
ALL RIGHTS OF DESIGN OR INVENTION ARE RESERVED.

TITLE DIAGRAM, SCHEMATIC
SCALE / / / CAD NO. SHEET 1–1
PLOTTED DWG. NO. GM89661 D

REV	DATE	REVISION	BY	M F
–	11–20–13	NEW DRAWING [CT555090]	DFS	
A	8–17–15	(D–3) TB2 MODBUS CONNECTION VIEW UPDATED; [CT120983]	BTW	

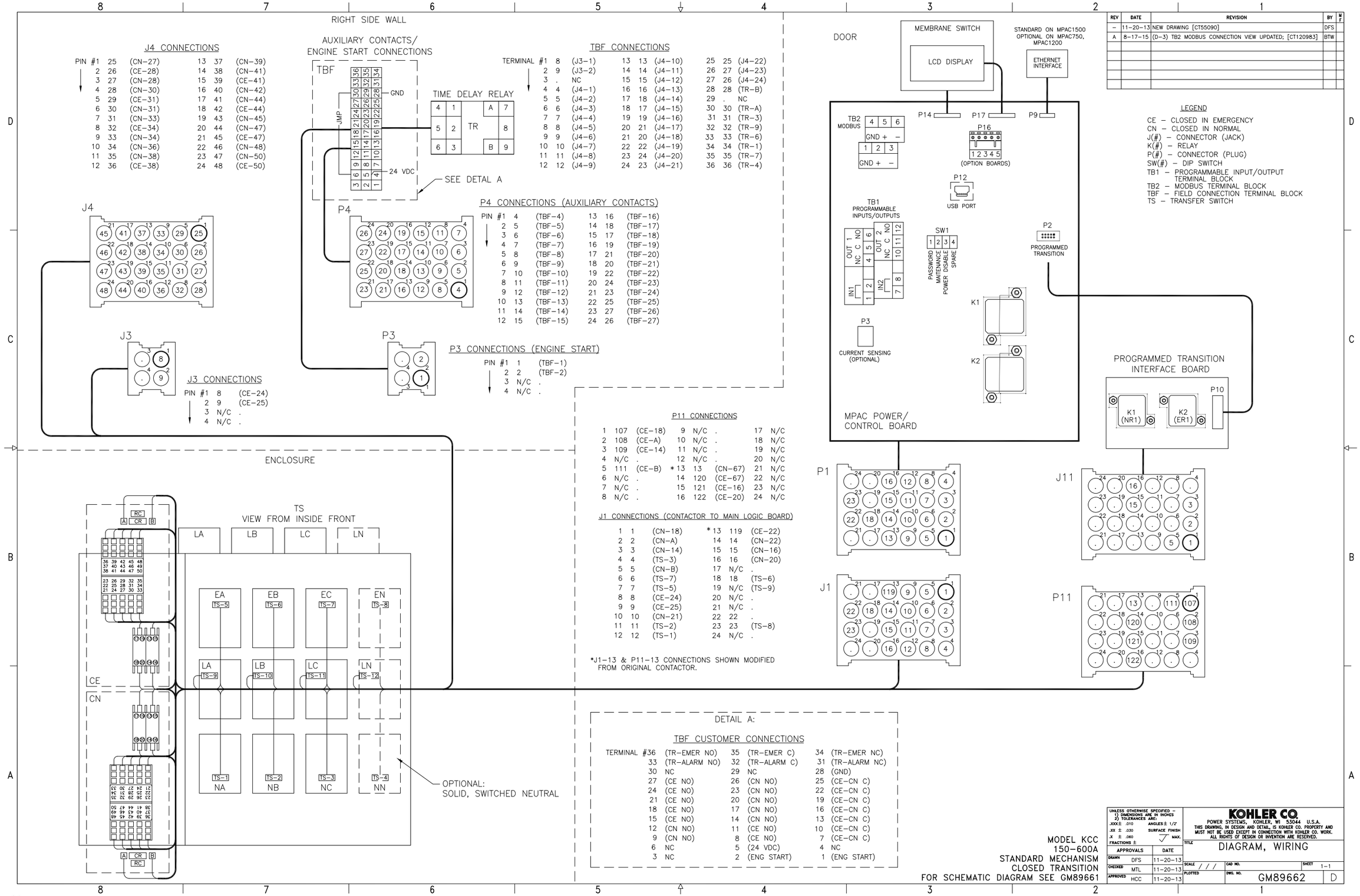

MODEL KCC
150–600A
STANDARD MECHANISM
CLOSED TRANSITION
FOR SCHEMATIC DIAGRAM SEE GM89661

UNLESS OTHERWISE SPECIFIED –
1) DIMENSIONS ARE IN INCHES
2) TOLERANCES ARE:
.XXX± .010 ANGLES ± 1/2°
.XX ± .030 SURFACE FINISH
.X ± .060 MAX.
FRACTIONS ±

APPROVALS		DATE
DRAWN	DFS	11–20–13
CHECKED	MTL	11–20–13
APPROVED	HCC	11–20–13
PLOTTED		

KOHLER CO.
POWER SYSTEMS, KOHLER, WI 53044 U.S.A.
THIS DRAWING, IN DESIGN AND DETAIL, IS KOHLER CO. PROPERTY AND MUST NOT BE USED EXCEPT IN CONNECTION WITH KOHLER CO. WORK. ALL RIGHTS OF DESIGN OR INVENTION ARE RESERVED.

TITLE DIAGRAM, WIRING
SCALE / / / CAD NO. SHEET 1–1
DWG. NO. GM89662 D

REV	DATE	REVISION	BY	M F
–	11–7–13	NEW DRAWING [CT55090]	DFS	
A	5–1–14	(C–6) BRIDGE RECTIFIER (BR): MISSING LINE ADDED BETWEEN		
		RESISTOR & AC2 [CT79954]	DFS	
B	8–17–15	(D–8) TB2 MODBUS CONNECTION VIEW UPDATED; [CT120983]	BTW	

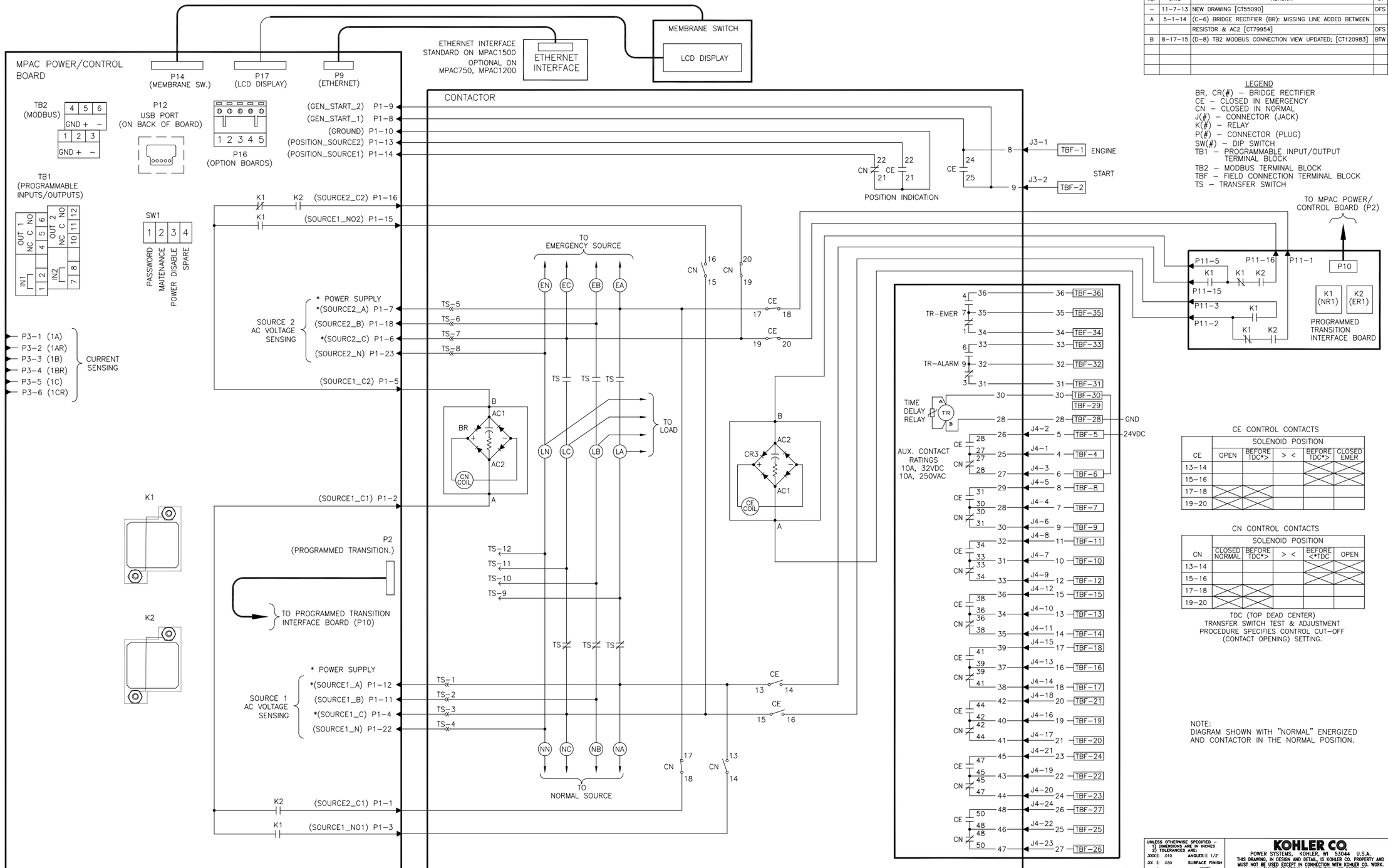

LEGEND

BR, CR(#) – BRIDGE RECTIFIER
CE – CLOSED IN EMERGENCY
CN – CLOSED IN NORMAL
J(#) – CONNECTOR (JACK)
K(#) – RELAY
P(#) – CONNECTOR (PLUG)
SW(#) – DIP SWITCH
TB1 – PROGRAMMABLE INPUT/OUTPUT TERMINAL BLOCK
TB2 – MODBUS TERMINAL BLOCK
TBF – FIELD CONNECTION TERMINAL BLOCK
TS – TRANSFER SWITCH

CE CONTROL CONTACTS

CE	SOLENOID POSITION				
	OPEN	BEFORE TDC*>	> <	BEFORE TDC*>	CLOSED EMER
13–14				X	X
15–16				X	X
17–18	X	X			
19–20	X	X			

CN CONTROL CONTACTS

CN	SOLENOID POSITION				
	CLOSED NORMAL	BEFORE TDC*>	> <	BEFORE <*TDC	OPEN
13–14				X	X
15–16				X	X
17–18	X	X			
19–20	X	X			

TDC (TOP DEAD CENTER)
TRANSFER SWITCH TEST & ADJUSTMENT PROCEDURE SPECIFIES CONTROL CUT–OFF (CONTACT OPENING) SETTING.

NOTE:
DIAGRAM SHOWN WITH "NORMAL" ENERGIZED AND CONTACTOR IN THE NORMAL POSITION.

MODEL KCC
800–1200A
STANDARD MECHANISM
CLOSED TRANSITION
FOR WIRING DIAGRAM SEE GM89664

UNLESS OTHERWISE SPECIFIED – 1) DIMENSIONS ARE IN INCHES 2) TOLERANCES ARE:
.XXX ± .010 ANGLES ± 1/2°
.XX ± .030 SURFACE FINISH
.X ± .060 MAX.
FRACTIONS ±

APPROVALS		DATE
DRAWN	DFS	11–7–13
CHECKED	MTL	11–7–13
APPROVED	HCC	11–7–13

KOHLER CO.
POWER SYSTEMS, KOHLER, WI 53044 U.S.A.
THIS DRAWING, IN DESIGN AND DETAIL, IS KOHLER CO. PROPERTY AND MUST NOT BE USED EXCEPT IN CONNECTION WITH KOHLER CO. WORK. ALL RIGHTS OF DESIGN OR INVENTION ARE RESERVED.

TITLE DIAGRAM, SCHEMATIC
SCALE / / / CAD NO. SHEET 1–1
PLOTTED DWG. NO. GM89663 D

REV	DATE	REVISION	BY	M F
–	11–20–13	NEW DRAWING [CT550909]	DFS	
A	8–17–15	(D–3) TB2 MODBUS CONNECTION VIEW UPDATED; [CT120983]	BTW	

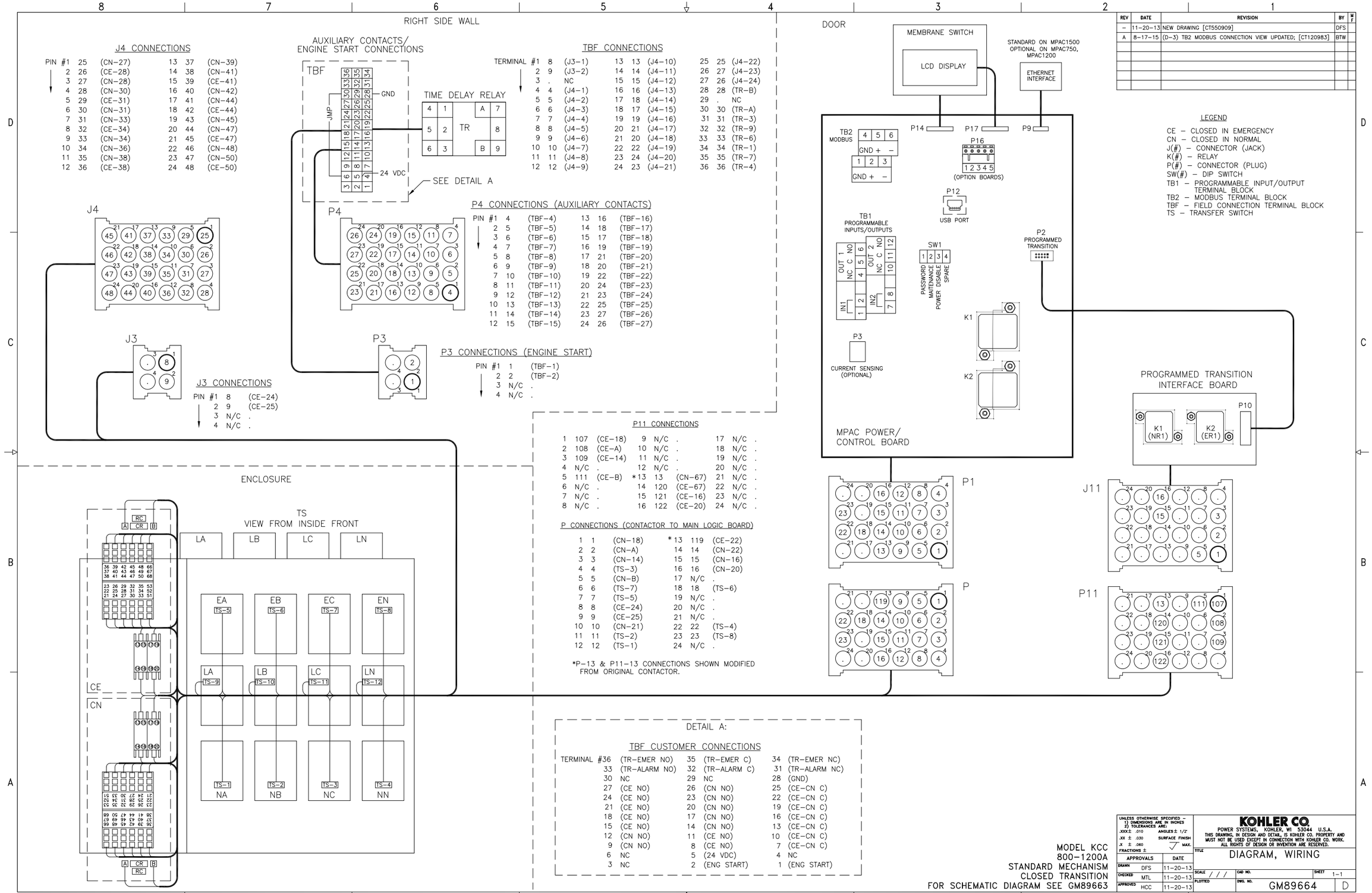

MODEL KCC
800–1200A
STANDARD MECHANISM
CLOSED TRANSITION
FOR SCHEMATIC DIAGRAM SEE GM89663

UNLESS OTHERWISE SPECIFIED –
1) DIMENSIONS ARE IN INCHES
2) TOLERANCES ARE:
.XXX± .010 ANGLES± 1/2°
.XX ± .030 SURFACE FINISH
.X ± .060 MAX.
FRACTIONS ±

APPROVALS		DATE
DRAWN	DFS	11–20–13
CHECKED	MTL	11–20–13
APPROVED	HCC	11–20–13

KOHLER CO.
POWER SYSTEMS, KOHLER, WI 53044 U.S.A.

THIS DRAWING, IN DESIGN AND DETAIL, IS KOHLER CO. PROPERTY AND MUST NOT BE USED EXCEPT IN CONNECTION WITH KOHLER CO. WORK. ALL RIGHTS OF DESIGN OR INVENTION ARE RESERVED.

TITLE DIAGRAM, WIRING
SCALE / / / CAD NO. SHEET 1–1
PLOTTED DWG. NO. GM89664 D

REV	DATE	REVISION	BY	M F
–	11–7–13	NEW DRAWING [CT55090]	DFS	
A	8–17–15	(D–8) TB2 MODBUS CONNECTION VIEW UPDATED; [CT120983]	BTW	

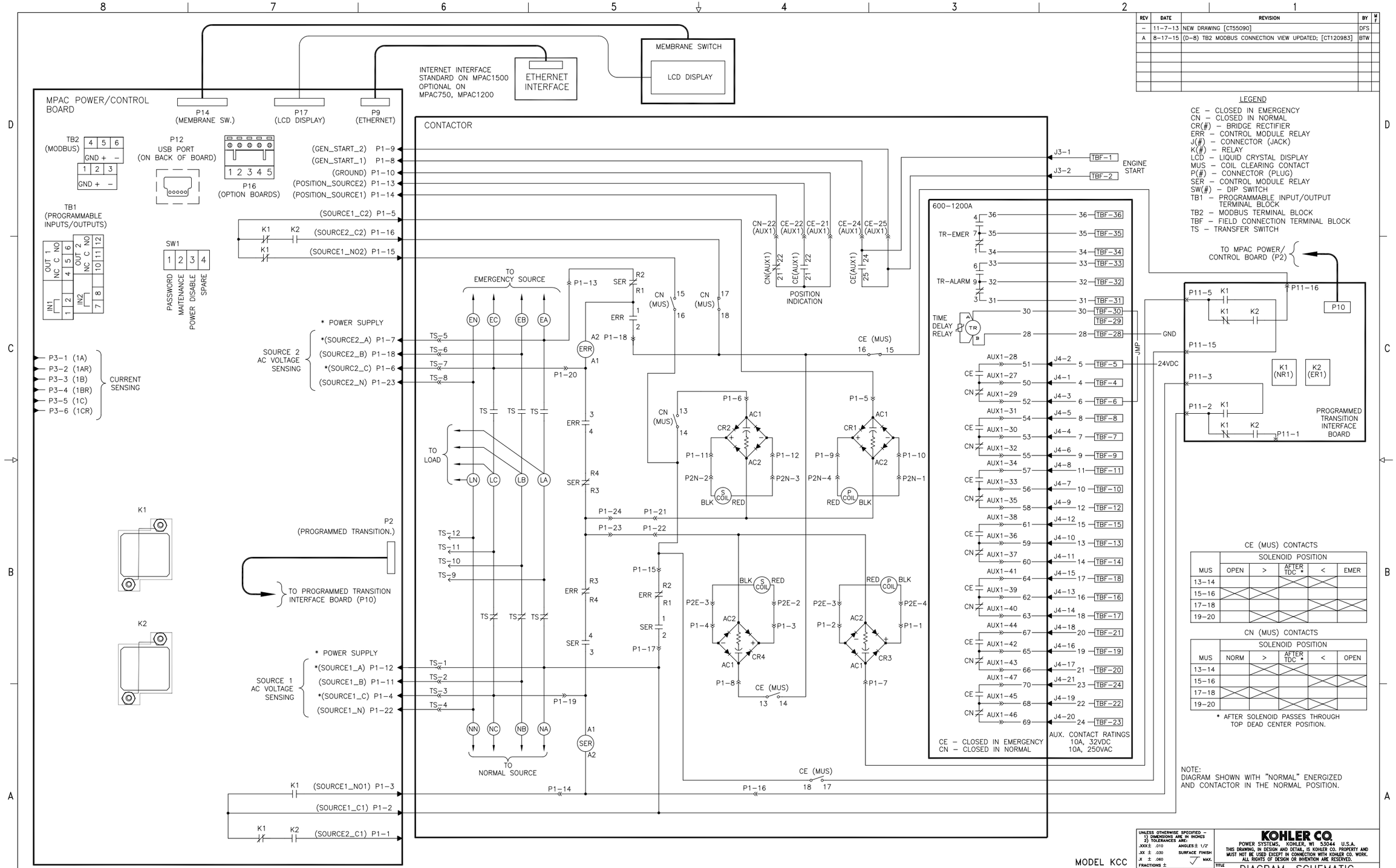

LEGEND

CE – CLOSED IN EMERGENCY
CN – CLOSED IN NORMAL
CR(#) – BRIDGE RECTIFIER
ERR – CONTROL MODULE RELAY
J(#) – CONNECTOR (JACK)
K(#) – RELAY
LCD – LIQUID CRYSTAL DISPLAY
MUS – COIL CLEARING CONTACT
P(#) – CONNECTOR (PLUG)
SER – CONTROL MODULE RELAY
SW(#) – DIP SWITCH
TB1 – PROGRAMMABLE INPUT/OUTPUT TERMINAL BLOCK
TB2 – MODBUS TERMINAL BLOCK
TBF – FIELD CONNECTION TERMINAL BLOCK
TS – TRANSFER SWITCH

CE (MUS) CONTACTS

MUS	SOLENOID POSITION				
	OPEN	>	AFTER TDC *	<	EMER
13–14					
15–16					
17–18					
19–20					

CN (MUS) CONTACTS

MUS	SOLENOID POSITION				
	NORM	>	AFTER TDC *	<	OPEN
13–14					
15–16					
17–18					
19–20					

* AFTER SOLENOID PASSES THROUGH TOP DEAD CENTER POSITION.

NOTE:
DIAGRAM SHOWN WITH "NORMAL" ENERGIZED AND CONTACTOR IN THE NORMAL POSITION.

MODEL KCC
1600–4000A
STANDARD MECHANISM
CLOSED TRANSITION
FOR WIRING DIAGRAM SEE GM89666

UNLESS OTHERWISE SPECIFIED –
1) DIMENSIONS ARE IN INCHES
2) TOLERANCES ARE:
.XXX ± .010 ANGLES ± 1/2°
.XX ± .030 SURFACE FINISH
.X ± .060 √ MAX.
FRACTIONS ±

APPROVALS		DATE
DRAWN	DFS	11–7–13
CHECKED	MTL	11–7–13
APPROVED	HCC	11–7–13

KOHLER CO.
POWER SYSTEMS, KOHLER, WI 53044 U.S.A.
THIS DRAWING, IN DESIGN AND DETAIL, IS KOHLER CO. PROPERTY AND MUST NOT BE USED EXCEPT IN CONNECTION WITH KOHLER CO. WORK. ALL RIGHTS OF DESIGN OR INVENTION ARE RESERVED.

TITLE: DIAGRAM, SCHEMATIC
SCALE / / / CAD NO. SHEET 1–1
PLOTTED DWG. NO. GM89665 D

REV	DATE	REVISION	BY	M F
–	11–20–13	NEW DRAWING [CT55090]	DFS	
A	8–17–15	(D–3) TB2 MODBUS CONNECTION VIEW UPDATED; [CT120983]	BTW	

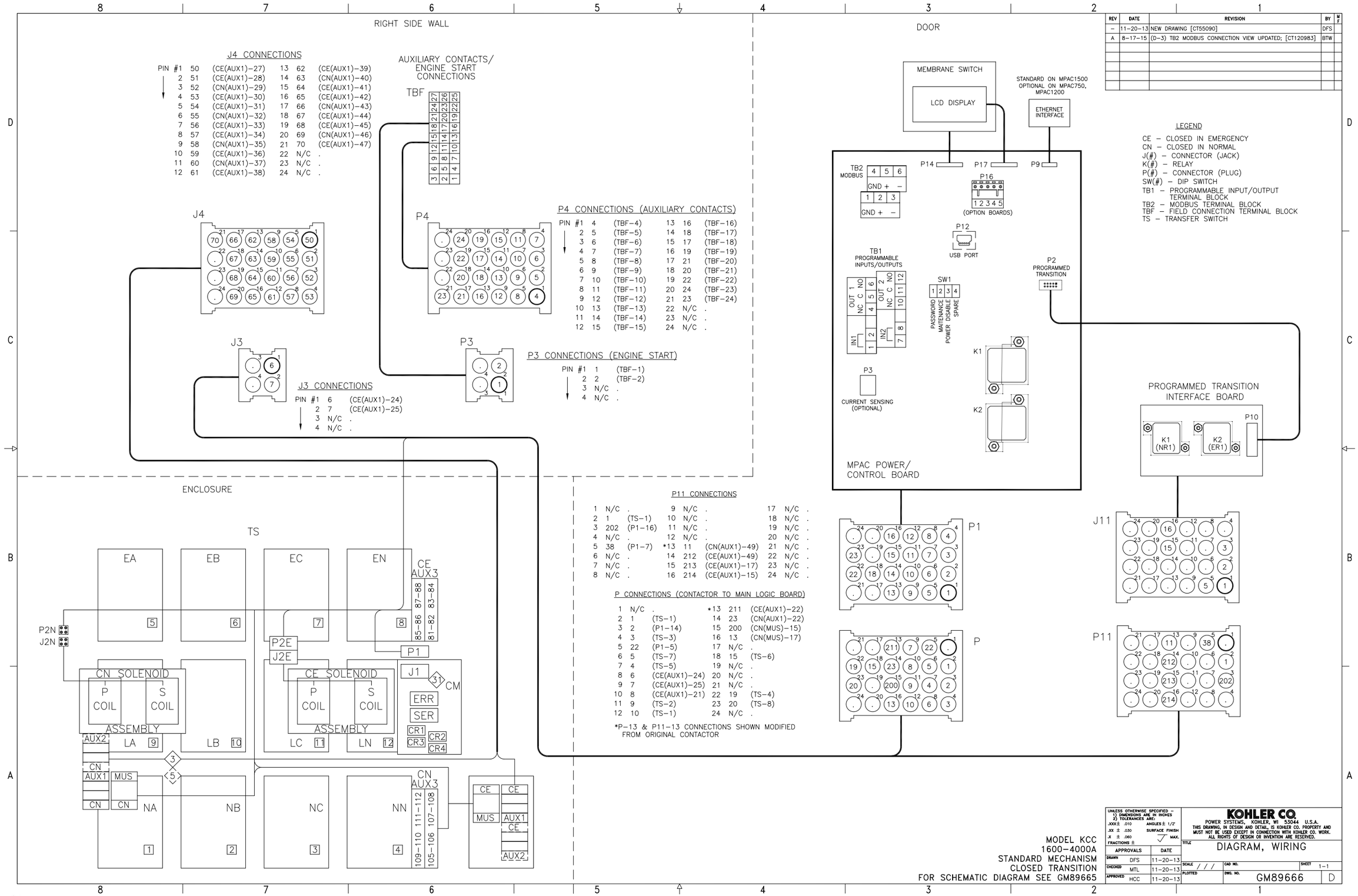

MODEL KCC
1600–4000A
STANDARD MECHANISM
CLOSED TRANSITION
FOR SCHEMATIC DIAGRAM SEE GM89665

UNLESS OTHERWISE SPECIFIED – 1) DIMENSIONS ARE IN INCHES 2) TOLERANCES ARE: .XXX ± .010 ANGLES ± 1/2° .XX ± .030 SURFACE FINISH .X ± .060 ✓ MAX. FRACTIONS ±

APPROVALS		DATE
DRAWN	DFS	11–20–13
CHECKED	MTL	11–20–13
APPROVED	HCC	11–20–13

KOHLER CO.
POWER SYSTEMS, KOHLER, WI 53044 U.S.A.
THIS DRAWING, IN DESIGN AND DETAIL, IS KOHLER CO. PROPERTY AND MUST NOT BE USED EXCEPT IN CONNECTION WITH KOHLER CO. WORK. ALL RIGHTS OF DESIGN OR INVENTION ARE RESERVED.

TITLE: DIAGRAM, WIRING
SCALE: / / / CAD NO. SHEET 1–1
PLOTTED DWG. NO. GM89666 D

REV	DATE	REVISION	BY	M F
–	11–12–13	NEW DRAWING [CT55093]	DFS	
A	5–1–14	(A–3) BRIDGE RECTIFIER (CR): MISSING LINE ADDED BETWEEN		
		RESISTOR & AC2 [CT79954]	DFS	
B	8–17–15	(D–8) TB2 MODBUS CONNECTION VIEW UPDATED; [CT120983]	BTW	

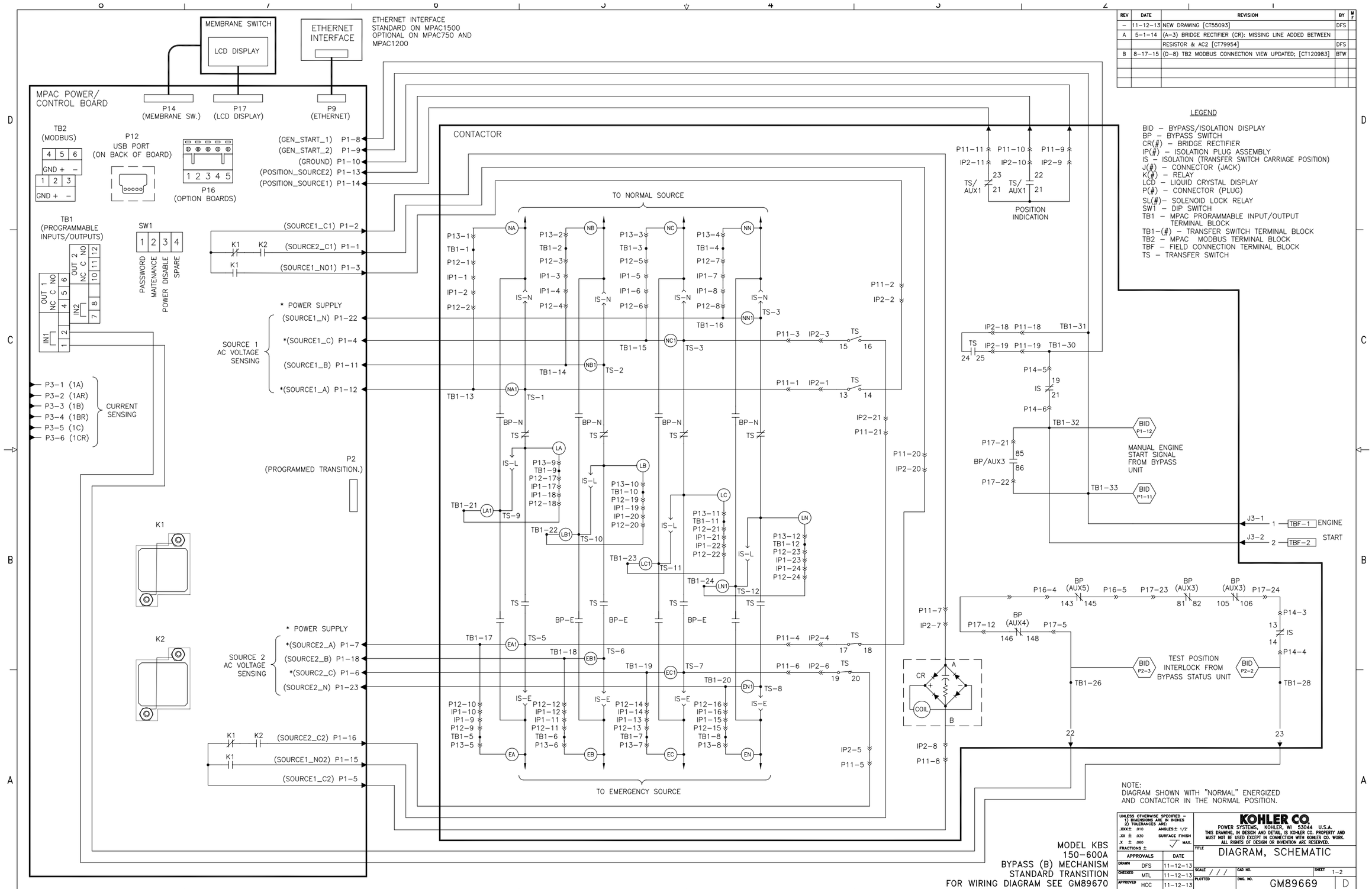

LEGEND

BID – BYPASS/ISOLATION DISPLAY
BP – BYPASS SWITCH
CR(#) – BRIDGE RECTIFIER
IP(#) – ISOLATION PLUG ASSEMBLY
IS – ISOLATION (TRANSFER SWITCH CARRIAGE POSITION)
J(#) – CONNECTOR (JACK)
K(#) – RELAY
LCD – LIQUID CRYSTAL DISPLAY
P(#) – CONNECTOR (PLUG)
SL(#)– SOLENOID LOCK RELAY
SW1 – DIP SWITCH
TB1 – MPAC PRORAMMABLE INPUT/OUTPUT TERMINAL BLOCK
TB1–(#) – TRANSFER SWITCH TERMINAL BLOCK
TB2 – MPAC MODBUS TERMINAL BLOCK
TBF – FIELD CONNECTION TERMINAL BLOCK
TS – TRANSFER SWITCH

NOTE:
DIAGRAM SHOWN WITH "NORMAL" ENERGIZED AND CONTACTOR IN THE NORMAL POSITION.

MODEL KBS
150–600A
BYPASS (B) MECHANISM
STANDARD TRANSITION
FOR WIRING DIAGRAM SEE GM89670

UNLESS OTHERWISE SPECIFIED – 1) DIMENSIONS ARE IN INCHES 2) TOLERANCES ARE:
.XXX ± .010 ANGLES ± 1/2°
.XX ± .030 SURFACE FINISH
.X ± .060 √ MAX.
FRACTIONS ±

APPROVALS		DATE
DRAWN	DFS	11–12–13
CHECKED	MTL	11–12–13
APPROVED	HCC	11–12–13

KOHLER CO.
POWER SYSTEMS, KOHLER, WI 53044 U.S.A.
THIS DRAWING, IN DESIGN AND DETAIL, IS KOHLER CO. PROPERTY AND MUST NOT BE USED EXCEPT IN CONNECTION WITH KOHLER CO. WORK. ALL RIGHTS OF DESIGN OR INVENTION ARE RESERVED.

TITLE: DIAGRAM, SCHEMATIC
SCALE: / / / CAD NO. SHEET 1–2
PLOTTED DWG. NO. GM89669 D

REV	DATE	REVISION	BY	M F
–	11–12–13	NEW DRAWING [CT55093]	DFS	
A	5–1–14	SEE SHEET 1 [CT79954]	DFS	
B	8–17–15	SEE SHEET 1 [CT120983]	BTW	

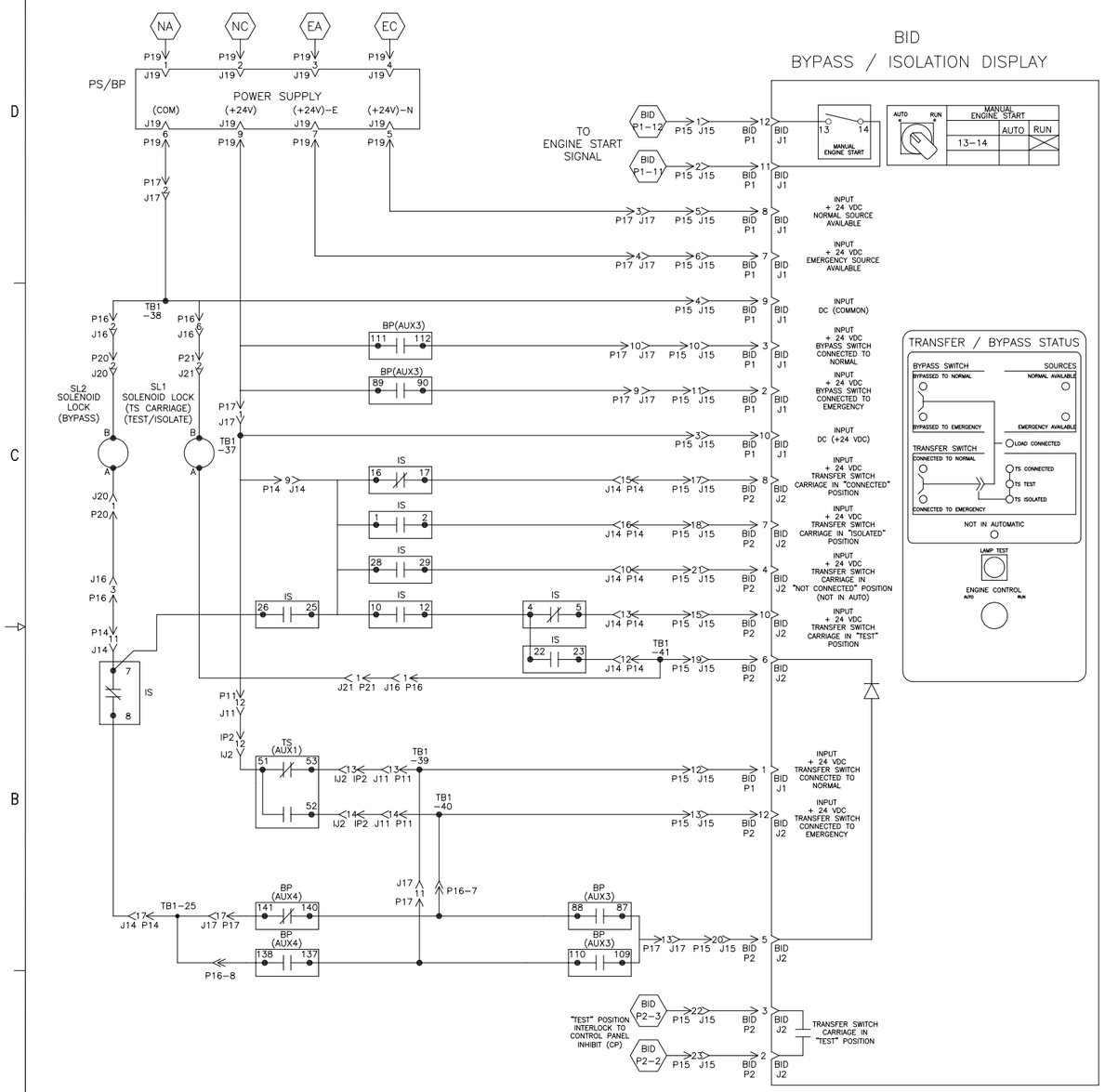

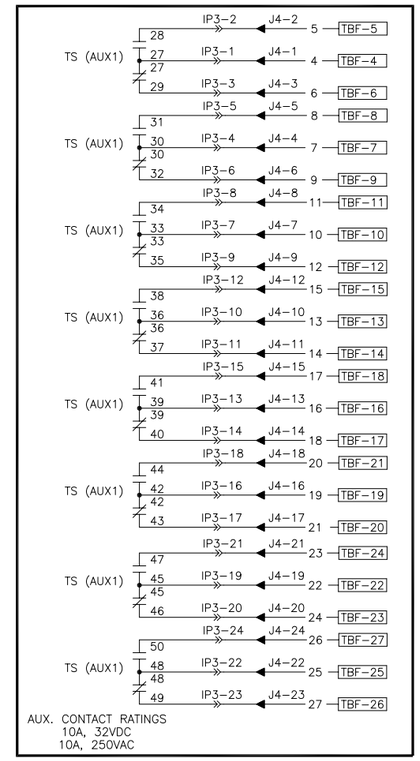

BYPASS SWITCH AUXILIARY CONTACTS

BP AUXILIARY CONTACT	STATUS (*)	BP SWITCH POSITION (AUX3) EMERG	OFF	NORMAL
81–82	●		X	
83–84			X	
85–86	●	X		
87–88	●	X		
89–90	●	X		
91–92		X		
93–94		X		
101–102			X	
103–104			X	
105–106	●		X	
107–108			X	
109–110	●	X		
111–112	●	X		
113–114		X		X
115–116		X		X
117–118		X		X
125–126			X	X
127–128			X	X

BYPASS SWITCH OPERATOR AUXILIARY CONTACTS

	BP AUXILIARY CONTACT	STATUS (*)	BP SWITCH HANDLE POSITION NORMAL (CCW) BYPASS (±90°)	NORMAL (CCW) <> ±20°	OFF	EMERGENCY (CW) <> ±20°	EMERGENCY (CW) BYPASS (±90°)
(AUX4)	140–141	●			X		
	140–142	●	X	X	X	X	X
	146–147	●	X	X	X	X	X
	146–148	●	X	X	X	X	X
(AUX5)	137–138	●	X	X	X	X	X
	137–139	●	X	X	X	X	X
	143–144	●	X	X	X	X	X
	143–145	●	X	X	X	X	X

ISOLATION (TRANSFER SWITCH CARRIAGE POSITION) AUXILIARY CONTACTS

IS AUXILIARY CONTACT	STATUS (*)	TRANSFER SWITCH CARRIAGE POSITION (AUX3) CONNECT	> <	TEST	> <	ISOLATE
1–2	●	X	X	X	X	X
1–3	●	X	X	X	X	X
4–5	●	X	X	X	X	X
4–6	●	X	X	X	X	X
7–8	●	X	X	X	X	X
7–9	●	X	X	X	X	X
10–11	●	X	X	X	X	X
10–12	●	X	X	X	X	X
13–14	●	X	X	X	X	X
13–15	●	X	X	X	X	X
16–17	●	X	X	X	X	X
16–18	●	X	X	X	X	X
19–20	●	X	X	X	X	X
19–21	●	X	X	X	X	X
22–23	●	X	X	X	X	X
22–24	●	X	X	X	X	X
25–26	●	X	X	X	X	X
25–27	●	X	X	X	X	X
28–29	●	X	X	X	X	X
28–30	●	X	X	X	X	X

(*) CONTACT AVAILABILITY STATUS:

"●" CONTACT PROVIDED & USED IN CIRCUITRY

"BLANK" CONTACT NOT USED. IF PHYSICALLY AVAILABLE, CONTACT IS FOR FACTORY USE ONLY!

TS CONTROL CONTACTS

TS	SOLENOID POSITION CLOSED NORMAL	BEFORE TDC*>	> <	BEFORE <*TDC	CLOSED EMERG
13–14				X	X
15–16				X	X
17–18	X	X			
19–20	X	X			

TDC (TOP DEAD CENTER)
TRANSFER SWITCH TEST & ADJUSTMENT PROCEDURE SPECIFIES CONTROL CUT–OFF (CONTACT OPENING) SETTING.

MODEL KBS
150–600A
BYPASS (B) MECHANISM
STANDARD TRANSITION
FOR WIRING DIAGRAM SEE GM89670

UNLESS OTHERWISE SPECIFIED – 1) DIMENSIONS ARE IN INCHES 2) TOLERANCES ARE: .XXX± .010 ANGLES ± 1/2° .XX ± .030 SURFACE FINISH .X ± .060 √ MAX. FRACTIONS ±

APPROVALS		DATE
DRAWN	DFS	11–12–13
CHECKED	MTL	11–12–13
APPROVED	HCC	11–12–13

KOHLER CO.
POWER SYSTEMS, KOHLER, WI 53044 U.S.A.
THIS DRAWING, IN DESIGN AND DETAIL, IS KOHLER CO. PROPERTY AND MUST NOT BE USED EXCEPT IN CONNECTION WITH KOHLER CO. WORK. ALL RIGHTS OF DESIGN OR INVENTION ARE RESERVED.

TITLE DIAGRAM, SCHEMATIC
SCALE / / / CAD NO. SHEET 2–2
PLOTTED DWG. NO. GM89669 D

REV	DATE	REVISION	BY	M F
–	11–22–13	NEW DRAWING [CT55093]	DFS	
A	8–17–15	(D–3) TB2 MODBUS CONNECTION VIEW UPDATED [CT120983]	BTW	

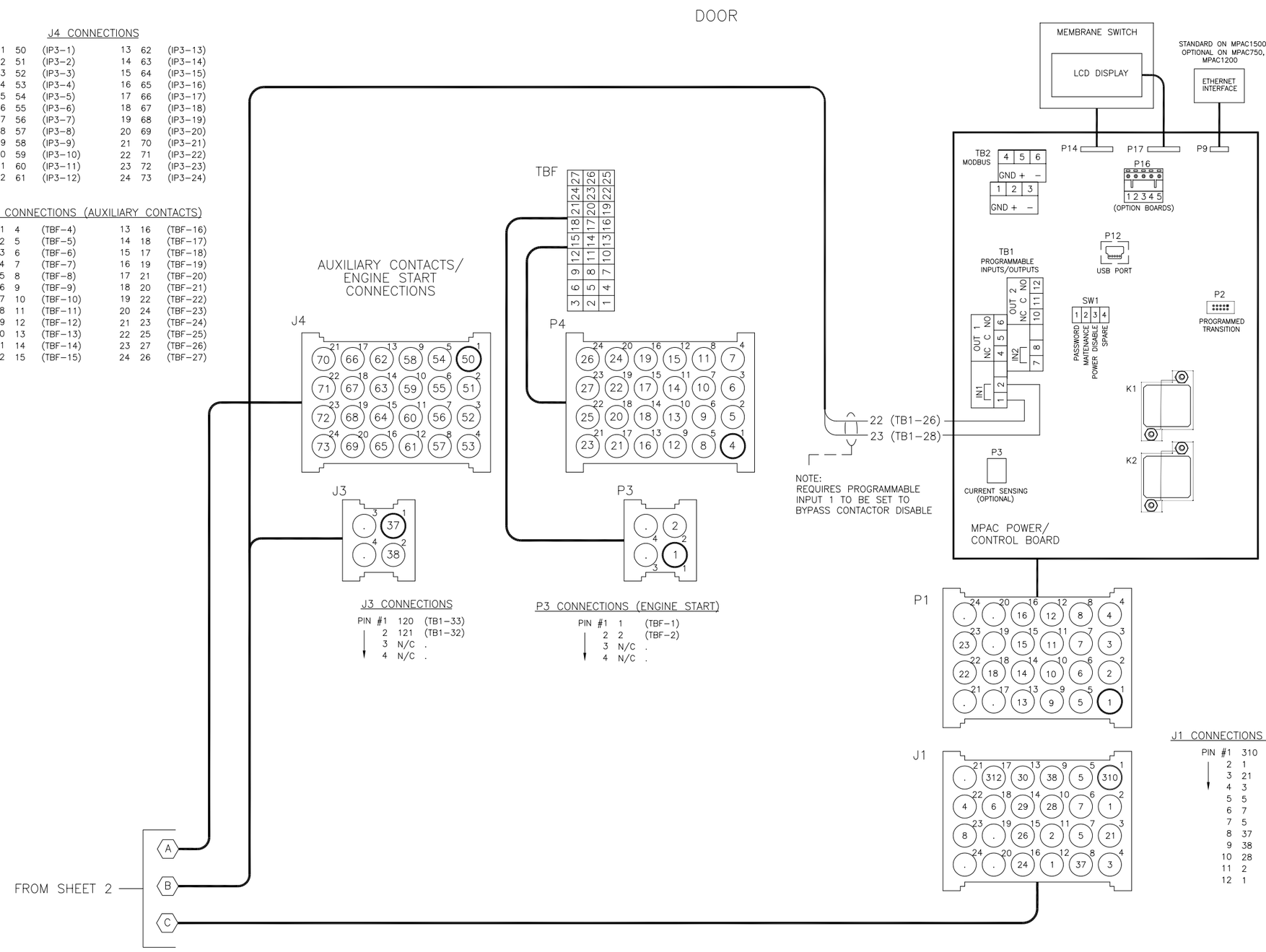

J4 CONNECTIONS

PIN					
#1	50	(IP3–1)	13	62	(IP3–13)
2	51	(IP3–2)	14	63	(IP3–14)
3	52	(IP3–3)	15	64	(IP3–15)
4	53	(IP3–4)	16	65	(IP3–16)
5	54	(IP3–5)	17	66	(IP3–17)
6	55	(IP3–6)	18	67	(IP3–18)
7	56	(IP3–7)	19	68	(IP3–19)
8	57	(IP3–8)	20	69	(IP3–20)
9	58	(IP3–9)	21	70	(IP3–21)
10	59	(IP3–10)	22	71	(IP3–22)
11	60	(IP3–11)	23	72	(IP3–23)
12	61	(IP3–12)	24	73	(IP3–24)

P4 CONNECTIONS (AUXILIARY CONTACTS)

PIN					
#1	4	(TBF–4)	13	16	(TBF–16)
2	5	(TBF–5)	14	18	(TBF–17)
3	6	(TBF–6)	15	17	(TBF–18)
4	7	(TBF–7)	16	19	(TBF–19)
5	8	(TBF–8)	17	21	(TBF–20)
6	9	(TBF–9)	18	20	(TBF–21)
7	10	(TBF–10)	19	22	(TBF–22)
8	11	(TBF–11)	20	24	(TBF–23)
9	12	(TBF–12)	21	23	(TBF–24)
10	13	(TBF–13)	22	25	(TBF–25)
11	14	(TBF–14)	23	27	(TBF–26)
12	15	(TBF–15)	24	26	(TBF–27)

J3 CONNECTIONS

PIN			
#1	120	(TB1–33)
2	121	(TB1–32)
3	N/C	.
4	N/C	.

P3 CONNECTIONS (ENGINE START)

PIN		
#1	1	(TBF–1)
2	2	(TBF–2)
3	N/C	.
4	N/C	.

LEGEND

BID – BYPASS/ISOLATION DISPLAY
IJ(#) – ISOLATION JACK ASSEMBLY
IP(#) – ISOLATION PLUG ASSEMBLY
IS – ISOLATION (TRANSFER SWITCH CARRIAGE POSITION)
J(#) – CONNECTOR (JACK)
K(#) – RELAY
LCD – LIQUID CRYSTAL DISPLAY
P(#) – CONNECTOR (PLUG)
PS – POWER SUPPLY
SL(#) – SOLENOID LOCK RELAY
SW(#) – DIP SWITCH
TB1 – INTERCONNECT TERMINAL BLOCK (TRANSFER SWITCH)
TB1 – PROGRAMMABLE INPUT/OUTPUT TERMINAL BLOCK (MPAC)
TB2 – MODBUS TERMINAL BLOCK (MPAC)
TBF – FIELD CONNECTION TERMINAL BLOCK
TS – TRANSFER SWITCH

J1 CONNECTIONS (CONTACTOR TO MAIN LOGIC BOARD)

PIN					
#1	310	(P11–20)	13	30	(P11–10)
2	1	(P11–7)	14	29	(P11–11)
3	21	(P11–2)	15	26	(P11–21)
4	3	(TB1–15)	16	24	(P11–5)
5	5	(P11–8)	17	312	(P–17)
6	7	(TB1–19)	18	6	(TB1–18)
7	5	(TB1–17)	19	N/C	.
8	37	(TB1–30)	20	N/C	.
9	38	(TB1–31)	21	N/C	.
10	28	(P11–9)	22	4	(TB1–16)
11	2	(TB1–14)	23	8	(TB1–20)
12	1	(TB1–13)	24	N/C	.

MODEL KBS
150–600A
BYPASS (B) MECHANISM
STANDARD TRANSITION
FOR SCHEMATIC DIAGRAM SEE GM89669

UNLESS OTHERWISE SPECIFIED – 1) DIMENSIONS ARE IN INCHES 2) TOLERANCES ARE:
.XXX± .010 ANGLES± 1/2°
.XX ± .030 SURFACE FINISH
.X ± .060 √ MAX.
FRACTIONS ±

APPROVALS		DATE
DRAWN	DFS	11–22–13
CHECKED	MTL	11–22–13
APPROVED	HCC	11–22–13

KOHLER CO.
POWER SYSTEMS, KOHLER, WI 53044 U.S.A.
THIS DRAWING, IN DESIGN AND DETAIL, IS KOHLER CO. PROPERTY AND MUST NOT BE USED EXCEPT IN CONNECTION WITH KOHLER CO. WORK. ALL RIGHTS OF DESIGN OR INVENTION ARE RESERVED.

TITLE DIAGRAM, WIRING
SCALE / / / CAD NO. SHEET 1–2
PLOTTED DWG. NO. GM89670 D

REV	DATE	REVISION	BY	M F
–	11-22-13	NEW DRAWING [CT55093]	DFS	
A	8-17-15	SEE SHEET 1 [CT120983]	BTW	

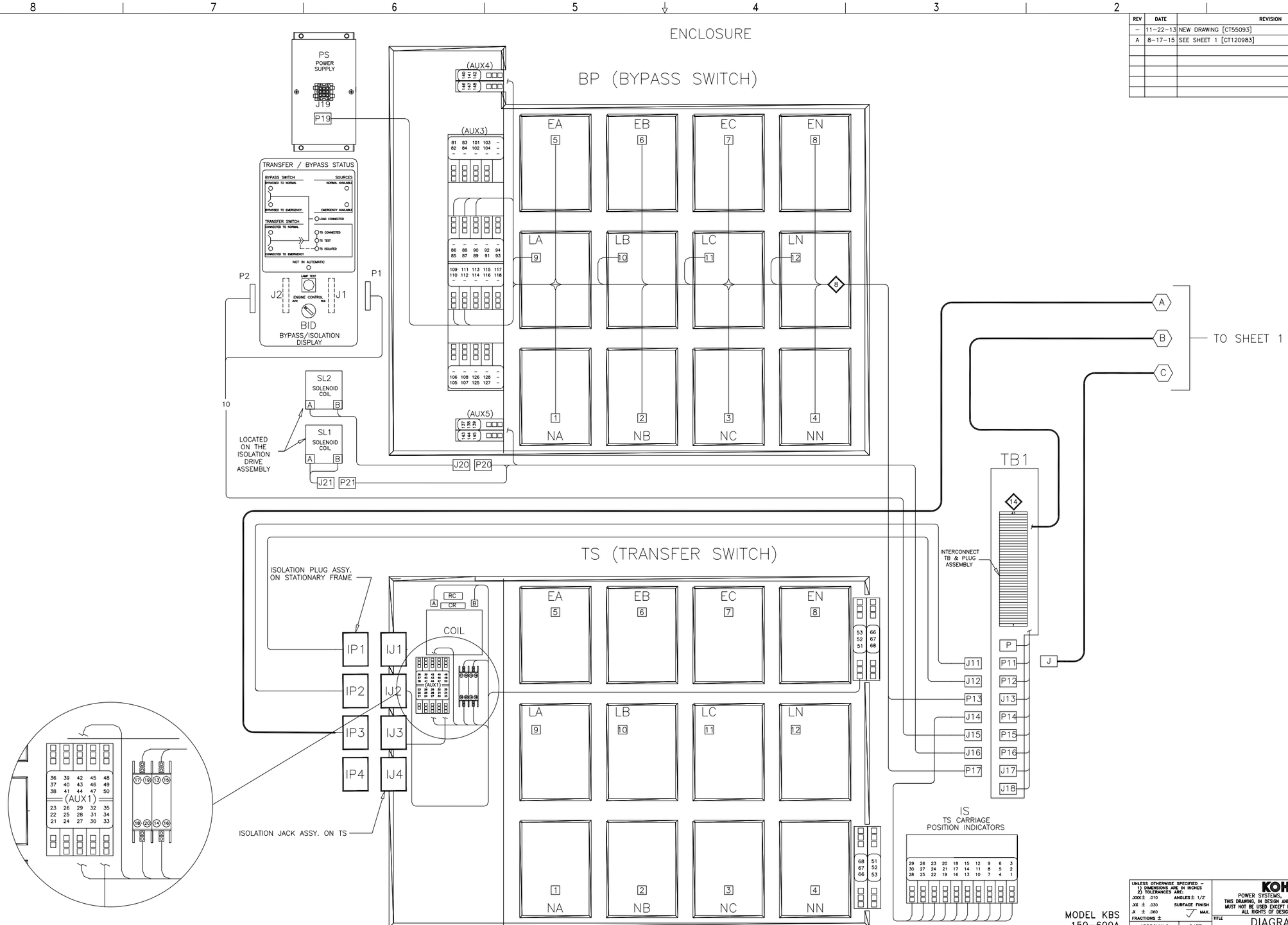

MODEL KBS
150–600A
BYPASS (B) MECHANISM
STANDARD TRANSITION
FOR SCHEMATIC DIAGRAM SEE GM89669

UNLESS OTHERWISE SPECIFIED – 1) DIMENSIONS ARE IN INCHES 2) TOLERANCES ARE:
.XXX ± .010 ANGLES ± 1/2°
.XX ± .030 SURFACE FINISH
.X ± .060 √ MAX.
FRACTIONS ±

APPROVALS		DATE
DRAWN	DFS	11-22-13
CHECKED	MTL	11-22-13
APPROVED	HCC	11-22-13

KOHLER CO.
POWER SYSTEMS, KOHLER, WI 53044 U.S.A.
THIS DRAWING, IN DESIGN AND DETAIL, IS KOHLER CO. PROPERTY AND MUST NOT BE USED EXCEPT IN CONNECTION WITH KOHLER CO. WORK. ALL RIGHTS OF DESIGN OR INVENTION ARE RESERVED.

TITLE: DIAGRAM, WIRING

SCALE / / / | CAD NO. | SHEET 2-2
PLOTTED | DWG. NO. GM89670 | D

REV	DATE	REVISION	BY	M F
–	11–12–13	NEW DRAWING [CT55093]	DFS	
A	5–1–14	(A–3) BRIDGE RECTIFIER (CR): MISSING LINE ADDED BETWEEN		
		RESISTOR & AC2 [CT79954]	DFS	
B	8–17–15	(D–8) TB2 MODBUS CONNECTIONS VIEW UPDATED; [CT120983]	BTW	

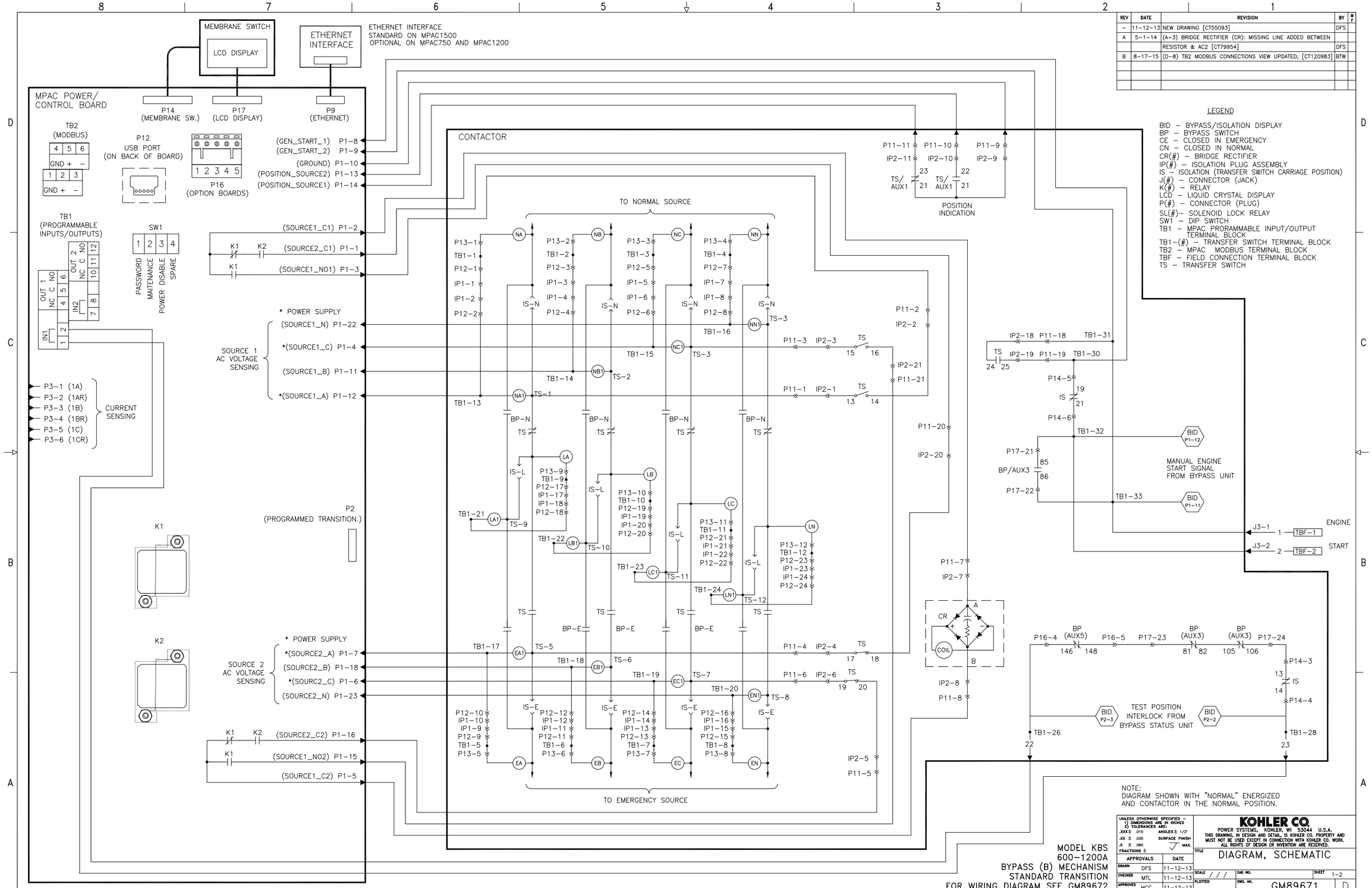

NOTE:
DIAGRAM SHOWN WITH "NORMAL" ENERGIZED AND CONTACTOR IN THE NORMAL POSITION.

MODEL KBS
600–1200A
BYPASS (B) MECHANISM
STANDARD TRANSITION
FOR WIRING DIAGRAM SEE GM89672

UNLESS OTHERWISE SPECIFIED – 1) DIMENSIONS ARE IN INCHES 2) TOLERANCES ARE: .XXX± .010 ANGLES± 1/2° .XX ± .030 SURFACE FINISH .X ± .060 MAX. FRACTIONS ±

APPROVALS		DATE
DRAWN	DFS	11–12–13
CHECKED	MTL	11–12–13
APPROVED	HCC	11–12–13

KOHLER CO.
POWER SYSTEMS, KOHLER, WI 53044 U.S.A.
THIS DRAWING, IN DESIGN AND DETAIL, IS KOHLER CO. PROPERTY AND MUST NOT BE USED EXCEPT IN CONNECTION WITH KOHLER CO. WORK. ALL RIGHTS OF DESIGN OR INVENTION ARE RESERVED.

TITLE DIAGRAM, SCHEMATIC
SCALE / / / CAD NO. SHEET 1–2
PLOTTED DWG. NO. GM89671 D

REV	DATE	REVISION	BY	M F
–	11–12–13	NEW DRAWING [CT55093]	DFS	
A	5–1–14	SEE SHEET 1 [CT79954]	DFS	
B	8–17–15	SEE SHEET 1 [CT120983]	BTW	

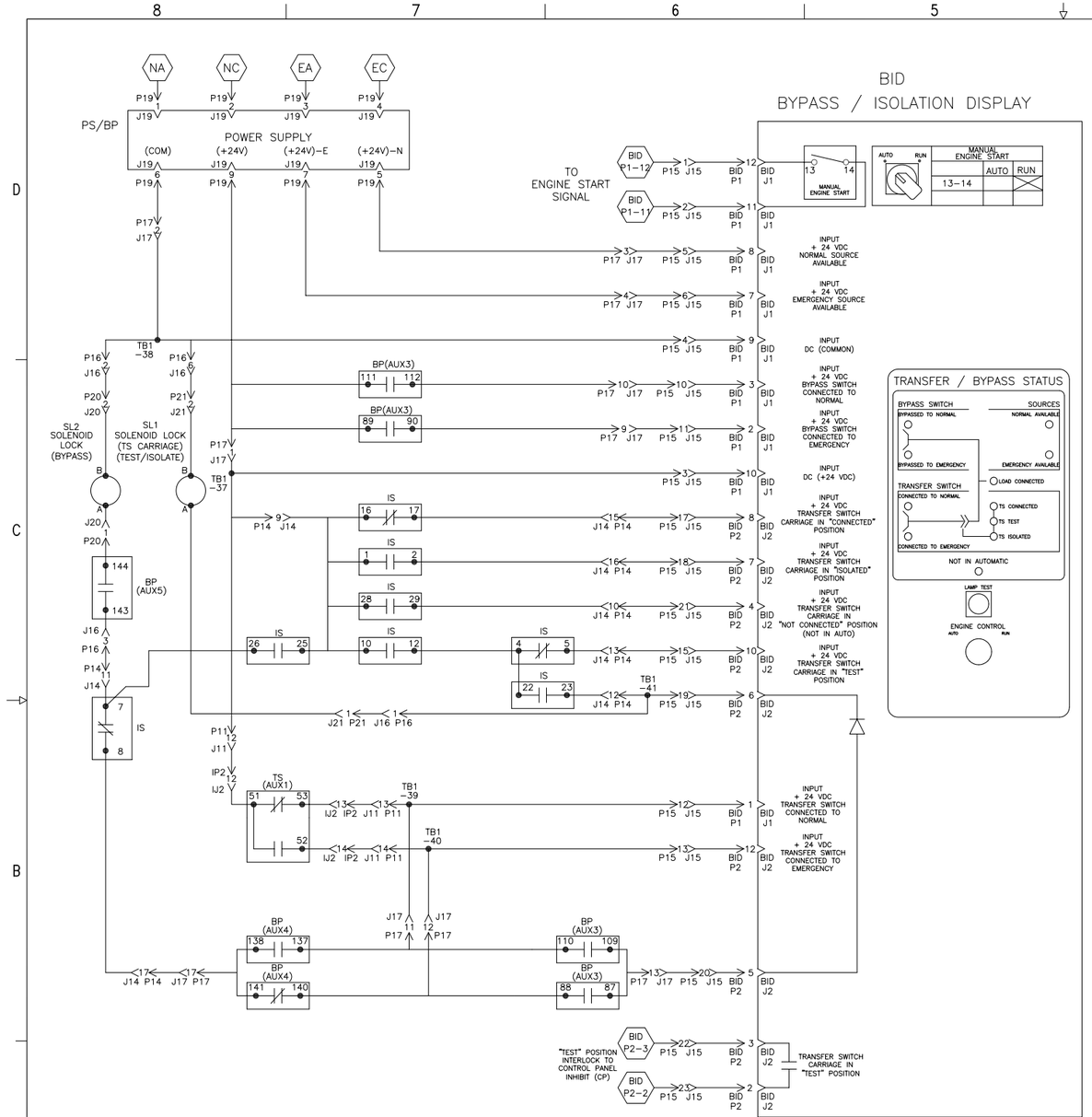

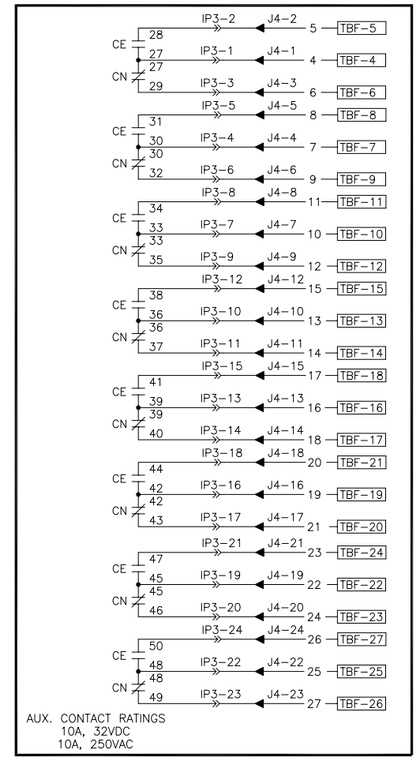

AUX. CONTACT RATINGS
10A, 32VDC
10A, 250VAC

TS	TS CONTROL CONTACTS				
	SOLENOID POSITION				
	CLOSED NORMAL	BEFORE TDC*>	>	<	BEFORE <*TDC	CLOSED EMERG
13–14					
15–16					
17–18					
19–20					

TDC (TOP DEAD CENTER)
TRANSFER SWITCH TEST & ADJUSTMENT PROCEDURE SPECIFIES CONTROL CUT–OFF (CONTACT OPENING) SETTING.

BYPASS SWITCH AUXILIARY CONTACTS

BP AUXILIARY CONTACT	STATUS (*)	BP SWITCH POSITION (AUX3)		
		EMERG	OFF	NORMAL
81–82	●			
83–84				
85–86	●			
87–88	●			
89–90	●			
91–92				
93–94				
101–102				
103–104				
105–106	●			
107–108				
109–110	●			
111–112	●			
113–114				
115–116				
117–118				
125–126				
127–128				

BYPASS SWITCH OPERATOR AUXILIARY CONTACTS

BP AUXILIARY CONTACT	STATUS (*)	BP HANDLE POSITION (AUX4)	
		EMERG (OUT)	NORMAL (IN)
137–138	●		
137–39			
140–141	●		
140–142			

BYPASS SWITCH OPERATOR AUXILIARY CONTACTS

BP AUXILIARY CONTACT	STATUS (*)	BP HANDLE POSITION (AUX5)		
		SWITCH OFF	<> ±10°	BYPASS (±90°)
143–144	●			
143–145	●			
146–147	●			
146–148	●			

ISOLATION (TRANSFER SWITCH CARRIAGE POSITION) AUXILIARY CONTACTS

IS AUXILIARY CONTACT	STATUS (*)	TRANSFER SWITCH CARRIAGE POSITION (AUX3)				
		CONNECT	≷	TEST	≷	ISOLATE
1–2	●					
1–3	●					
4–5	●					
4–6	●					
7–8	●					
7–9	●					
10–11	●					
10–12	●					
13–14	●					
13–15	●					
16–17	●					
16–18	●					
19–20	●					
19–21	●					
22–23	●					
22–24	●					
25–26	●					
25–27	●					
28–29	●					
28–30	●					

(*) CONTACT AVAILABILITY STATUS:

"●" CONTACT PROVIDED & USED IN CIRCUITRY

"BLANK" CONTACT NOT USED. IF PHYSICALLY AVAILABLE, CONTACT IS FOR FACTORY USE ONLY!

MODEL KBS
600–1200A
BYPASS (B) MECHANISM
STANDARD TRANSITION
FOR WIRING DIAGRAM SEE GM89672

UNLESS OTHERWISE SPECIFIED –
1) DIMENSIONS ARE IN INCHES
2) TOLERANCES ARE:
.XXX ± .010 ANGLES ± 1/2°
.XX ± .030 SURFACE FINISH
.X ± .060 √ MAX.
FRACTIONS ±

APPROVALS		DATE
DRAWN	DFS	11–12–13
CHECKED	MTL	11–12–13
APPROVED	HCC	11–12–13

KOHLER CO.
POWER SYSTEMS, KOHLER, WI 53044 U.S.A.
THIS DRAWING, IN DESIGN AND DETAIL, IS KOHLER CO. PROPERTY AND MUST NOT BE USED EXCEPT IN CONNECTION WITH KOHLER CO. WORK. ALL RIGHTS OF DESIGN OR INVENTION ARE RESERVED.

TITLE DIAGRAM, SCHEMATIC
SCALE / / / CAD NO. SHEET 2–2
PLOTTED DWG. NO. GM89671 D

REV	DATE	REVISION	BY	M F
–	11–22–13	NEW DRAWING [CT55093]	DFS	
A	8–17–15	(D–3) TB2 MODBUS CONNECTION VIEW UPDATED; [CT120983]	BTW	

P4 CONNECTIONS (AUXILIARY CONTACTS)

PIN					
#1	4	(TBF–4)	13	16	(TBF–16)
2	5	(TBF–5)	14	18	(TBF–17)
3	6	(TBF–6)	15	17	(TBF–18)
4	7	(TBF–7)	16	19	(TBF–19)
5	8	(TBF–8)	17	21	(TBF–20)
6	9	(TBF–9)	18	20	(TBF–21)
7	10	(TBF–10)	19	22	(TBF–22)
8	11	(TBF–11)	20	24	(TBF–23)
9	12	(TBF–12)	21	23	(TBF–24)
10	13	(TBF–13)	22	25	(TBF–25)
11	14	(TBF–14)	23	27	(TBF–26)
12	15	(TBF–15)	24	26	(TBF–27)

J4 CONNECTIONS

PIN					
#1	50	(IP3–1)	13	62	(IP3–13)
2	51	(IP3–2)	14	63	(IP3–14)
3	52	(IP3–3)	15	64	(IP3–15)
4	53	(IP3–4)	16	65	(IP3–16)
5	54	(IP3–5)	17	66	(IP3–17)
6	55	(IP3–6)	18	67	(IP3–18)
7	56	(IP3–7)	19	68	(IP3–19)
8	57	(IP3–8)	20	69	(IP3–20)
9	58	(IP3–9)	21	70	(IP3–21)
10	59	(IP3–10)	22	71	(IP3–22)
11	60	(IP3–11)	23	72	(IP3–23)
12	61	(IP3–12)	24	73	(IP3–24)

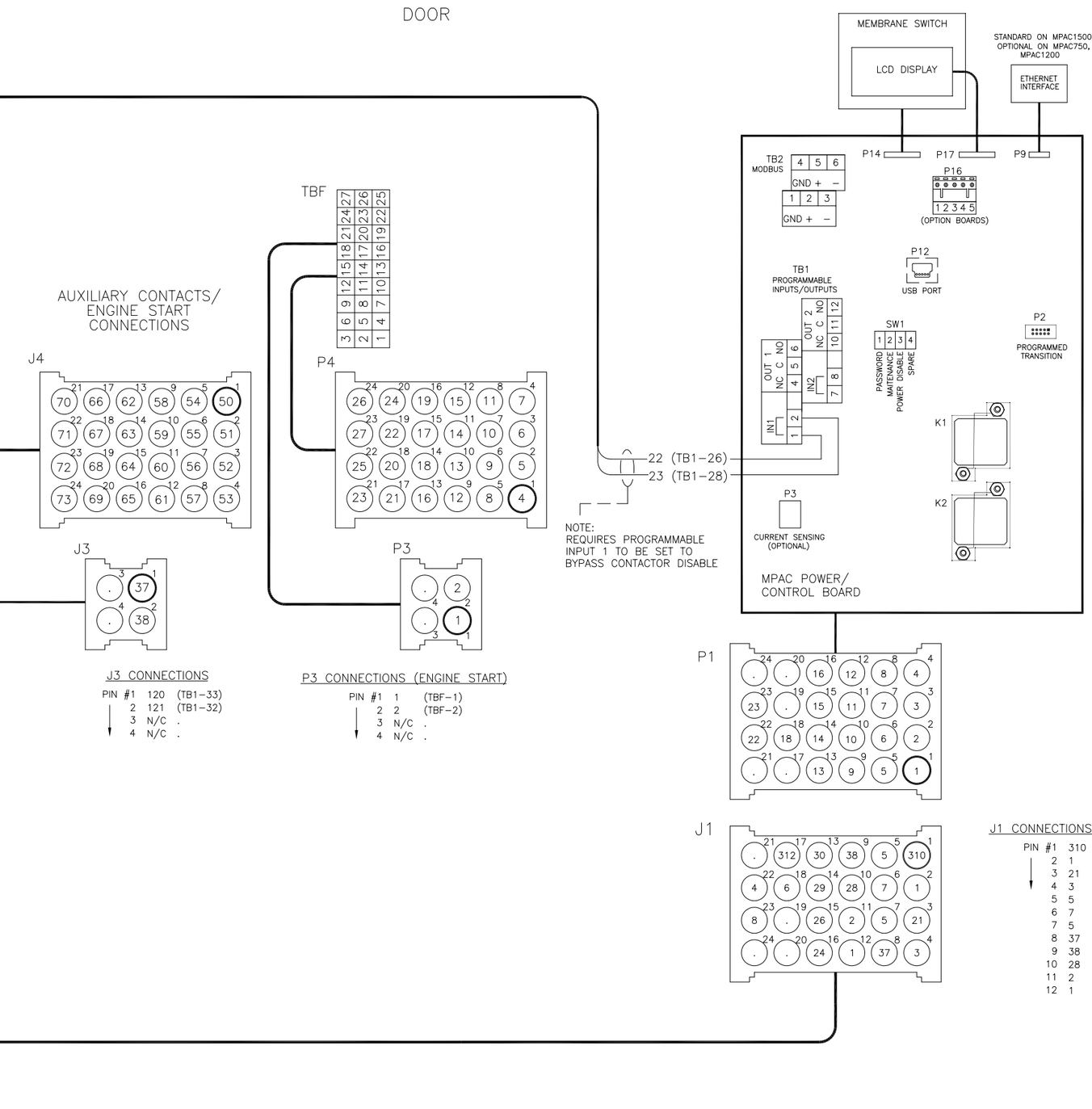

J3 CONNECTIONS

PIN			
#1	120	(TB1–33)
2	121	(TB1–32)
3	N/C	.
4	N/C	.

P3 CONNECTIONS (ENGINE START)

PIN		
#1	1	(TBF–1)
2	2	(TBF–2)
3	N/C	.
4	N/C	.

J1 CONNECTIONS (CONTACTOR TO MAIN LOGIC BOARD)

PIN					
#1	310	(P11–20)	13	30	(P11–10)
2	1	(P11–7)	14	29	(P11–11)
3	21	(P11–2)	15	26	(P11–21)
4	3	(TB1–15)	16	24	(P11–5)
5	5	(P11–8)	17	312	(P–17)
6	7	(TB1–19)	18	6	(TB1–18)
7	5	(TB1–17)	19	N/C	.
8	37	(TB1–30)	20	N/C	.
9	38	(TB1–31)	21	N/C	.
10	28	(P11–9)	22	4	(TB1–16)
11	2	(TB1–14)	23	8	(TB1–20)
12	1	(TB1–13)	24	N/C	.

LEGEND

BID – BYPASS/ISOLATION DISPLAY
IJ(#) – ISOLATION JACK ASSEMBLY
IP(#) – ISOLATION PLUG ASSEMBLY
IS – ISOLATION (TRANSFER SWITCH CARRIAGE POSITION)
J(#) – CONNECTOR (JACK)
K(#) – RELAY
LCD – LIQUID CRYSTAL DISPLAY
P(#) – CONNECTOR (PLUG)
PS – POWER SUPPLY
SL(#) – SOLENOID LOCK RELAY
SW(#) – DIP SWITCH
TB1 – INTERCONNECT TERMINAL BLOCK (TRANSFER SWITCH)
TB1 – PROGRAMMABLE INPUT/OUTPUT TERMINAL BLOCK (MPAC)
TB2 – MODBUS TERMINAL BLOCK (MPAC)
TBF – FIELD CONNECTION TERMINAL BLOCK
TS – TRANSFER SWITCH

MODEL KBS
600–1200A
BYPASS (B) MECHANISM
STANDARD TRANSITION
FOR SCHEMATIC DIAGRAM SEE GM89671

UNLESS OTHERWISE SPECIFIED – 1) DIMENSIONS ARE IN INCHES 2) TOLERANCES ARE:
.XXX± .010 ANGLES± 1/2°
.XX ± .030 SURFACE FINISH
.X ± .060 ✓ MAX.
FRACTIONS ±

APPROVALS		DATE
DRAWN	DFS	11–22–13
CHECKED	MTL	11–22–13
APPROVED	HCC	11–22–13

KOHLER CO.
POWER SYSTEMS, KOHLER, WI 53044 U.S.A.
THIS DRAWING, IN DESIGN AND DETAIL, IS KOHLER CO. PROPERTY AND MUST NOT BE USED EXCEPT IN CONNECTION WITH KOHLER CO. WORK. ALL RIGHTS OF DESIGN OR INVENTION ARE RESERVED.

TITLE: DIAGRAM, WIRING
SCALE: / / /
CAD NO.
SHEET 1–2
PLOTTED
DWG. NO. GM89672 D

REV	DATE	REVISION	BY	M F
–	11–22–13	NEW DRAWING [CT55093]	DFS	
A	8–17–15	SEE SHEET 1 [CT120983]	BTW	

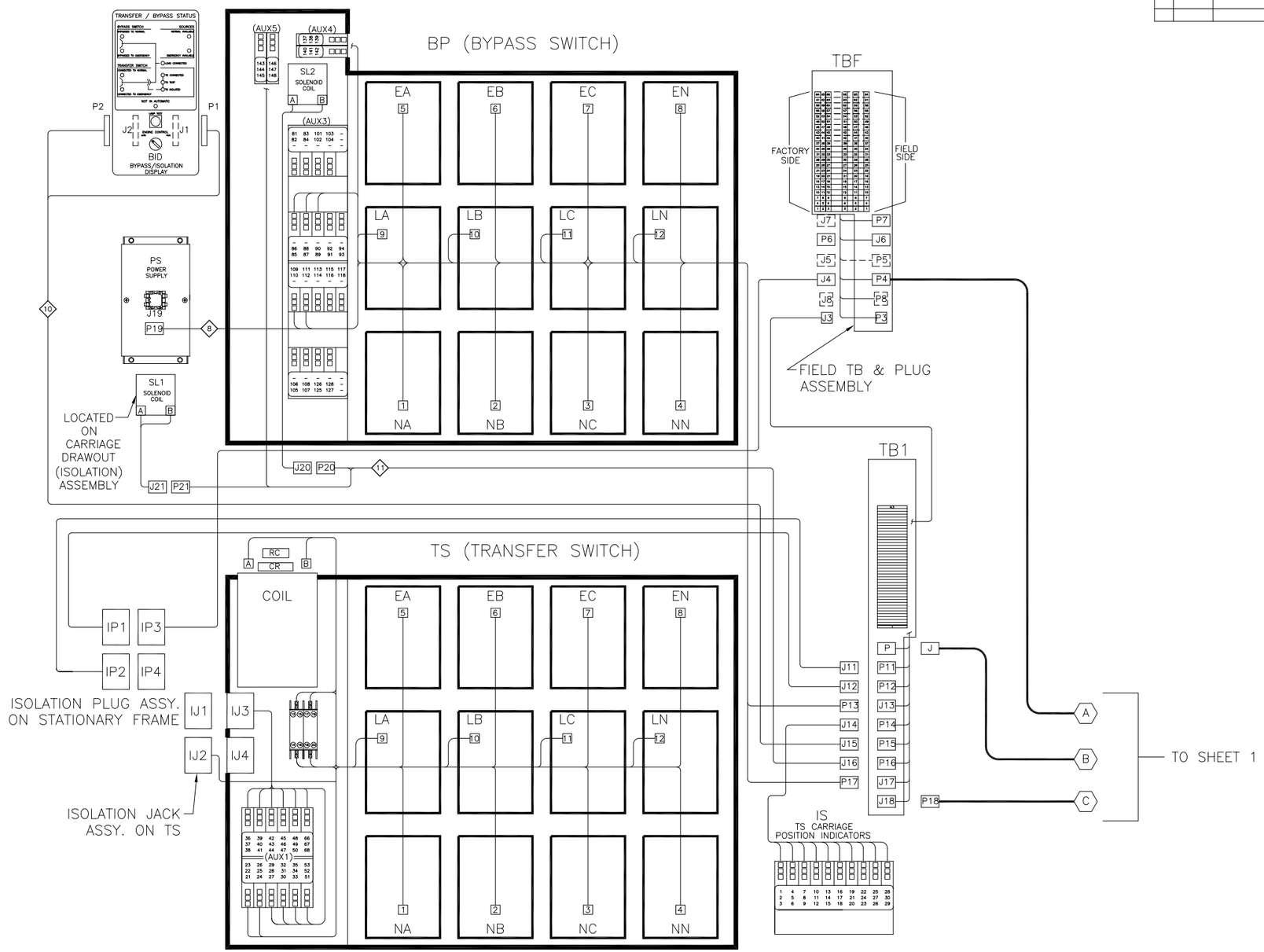

MODEL KBS
600–1200A
BYPASS (B) MECHANISM
STANDARD TRANSITION
FOR SCHEMATIC DIAGRAM SEE GM89671

UNLESS OTHERWISE SPECIFIED –
1) DIMENSIONS ARE IN INCHES
2) TOLERANCES ARE:
.XXX ± .010 ANGLES ± 1/2°
.XX ± .030 SURFACE FINISH
.X ± .060 MAX.
FRACTIONS ±

APPROVALS		DATE
DRAWN	DFS	11–22–13
CHECKED	MTL	11–22–13
APPROVED	HCC	11–22–13

KOHLER CO.
POWER SYSTEMS, KOHLER, WI 53044 U.S.A.
THIS DRAWING, IN DESIGN AND DETAIL, IS KOHLER CO. PROPERTY AND MUST NOT BE USED EXCEPT IN CONNECTION WITH KOHLER CO. WORK. ALL RIGHTS OF DESIGN OR INVENTION ARE RESERVED.

TITLE: DIAGRAM, WIRING

SCALE / / / | CAD NO. | SHEET 2–2
PLOTTED | DWG. NO. GM89672 | D

REV	DATE	REVISION	BY	M F
–	11–22–13	NEW DRAWING [CT55093]	DFS	
A	8–17–15	(C–2) TB2 MODBUS CONNECTION VIEW UPDATED; [CT120983]	BTW	

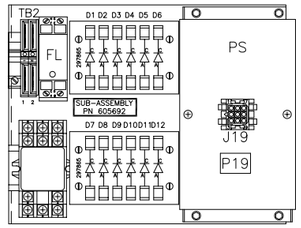

DETAIL A

ENCLOSURE

DOOR

J4 CONNECTIONS

PIN					
#1	50	(IP3–1)	13	62	(IP3–13)
2	51	(IP3–2)	14	63	(IP3–14)
3	52	(IP3–3)	15	64	(IP3–15)
4	53	(IP3–4)	16	65	(IP3–16)
5	54	(IP3–5)	17	66	(IP3–17)
6	55	(IP3–6)	18	67	(IP3–18)
7	56	(IP3–7)	19	68	(IP3–19)
8	57	(IP3–8)	20	69	(IP3–20)
9	58	(IP3–9)	21	70	(IP3–21)
10	59	(IP3–10)	22	71	(IP3–22)
11	60	(IP3–11)	23	72	(IP3–23)
12	61	(IP3–12)	24	73	(IP3–24)

P4 CONNECTIONS (AUXILIARY CONTACTS)

PIN					
#1	4	(TBF–4)	13	16	(TBF–16)
2	5	(TBF–5)	14	18	(TBF–17)
3	6	(TBF–6)	15	17	(TBF–18)
4	7	(TBF–7)	16	19	(TBF–19)
5	8	(TBF–8)	17	21	(TBF–20)
6	9	(TBF–9)	18	20	(TBF–21)
7	10	(TBF–10)	19	22	(TBF–22)
8	11	(TBF–11)	20	24	(TBF–23)
9	12	(TBF–12)	21	23	(TBF–24)
10	13	(TBF–13)	22	25	(TBF–25)
11	14	(TBF–14)	23	27	(TBF–26)
12	15	(TBF–15)	24	26	(TBF–27)

LEGEND

CR(#) – BRIDGE RECTIFIED
ERR, SER – CONTROL MODULE RELAY
IJ(#) – ISOLATION JACK ASSEMBLY
IP(#) – ISOLATION PLUG ASSEMBLY
IS – ISOLATION (TRANSFER SWITCH CARRIAGE POSITION)
J(#) – CONNECTOR (JACK)
K(#) – RELAY
LCD – LIQUID CRYSTAL DISPLAY
MUS – COIL CLEARING CONTACT
P(#) – CONNECTOR (PLUG)
PS – POWER SUPPLY
SW(#) – DIP SWITCH
TB1 – INTERCONNECT TERMINAL BLOCK (TRANSFER SWITCH)
TB1 – PROGRAMMABLE INPUT/OUTPUT TERMINAL BLOCK (MPAC)
TB2 – MODBUS TERMINAL BLOCK (MPAC)
TBF – FIELD CONNECTION TERMINAL BLOCK
TS – TRANSFER SWITCH

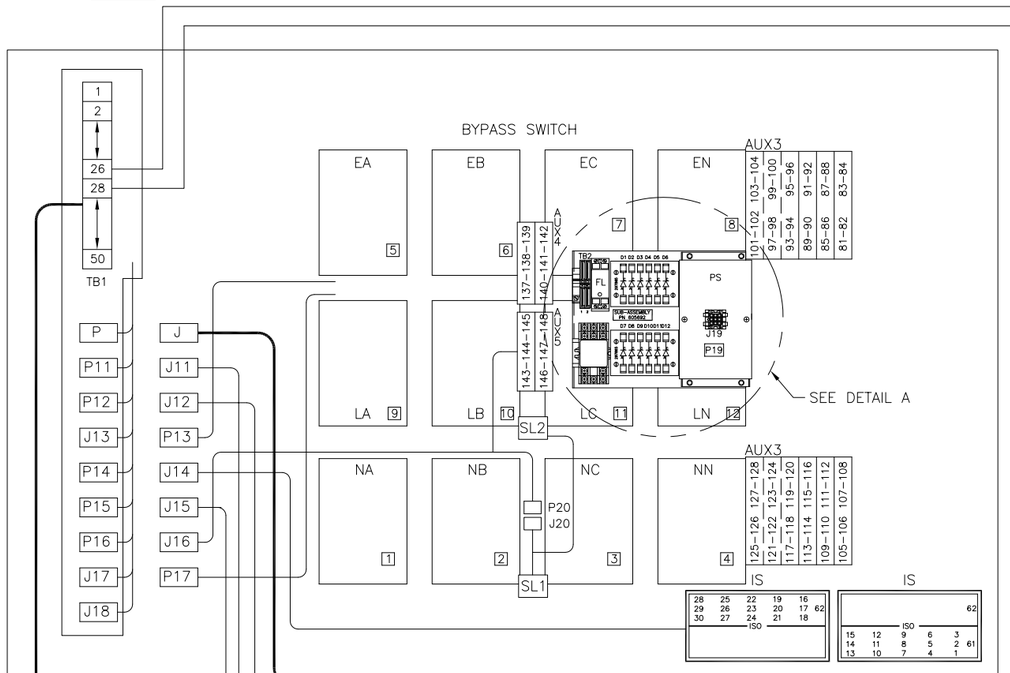

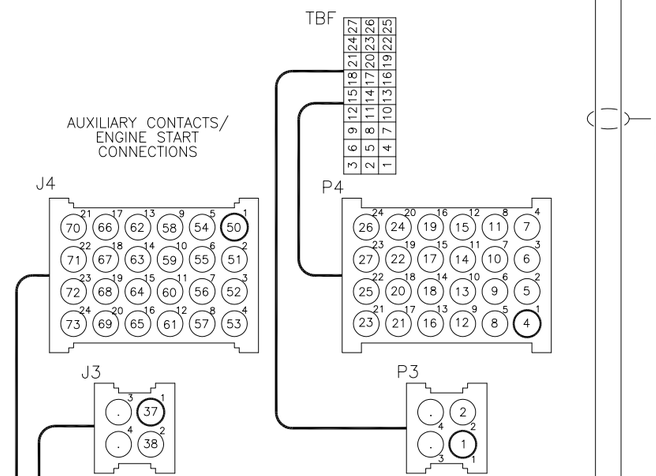

J3 CONNECTIONS

PIN		
#1	37	(TS(AUX1)–24)
2	38	(TS(AUX1)–25)
3	N/C	.
4	N/C	.

P3 CONNECTIONS (ENGINE START)

PIN		
#1	1	(TBF–1)
2	2	(TBF–2)
3	N/C	.
4	N/C	.

NOTE:
REQUIRES PROGRAMMABLE INPUT 1 TO BE SET TO BYPASS CONTACTOR DISABLE.

23 (TB1–26)
22 (TB1–28)

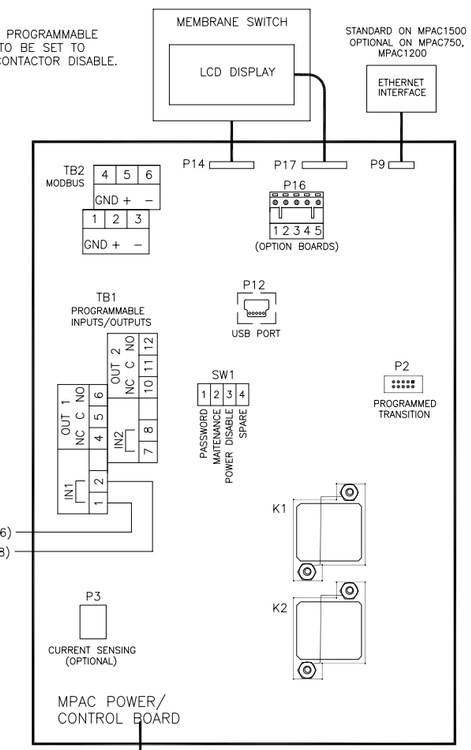

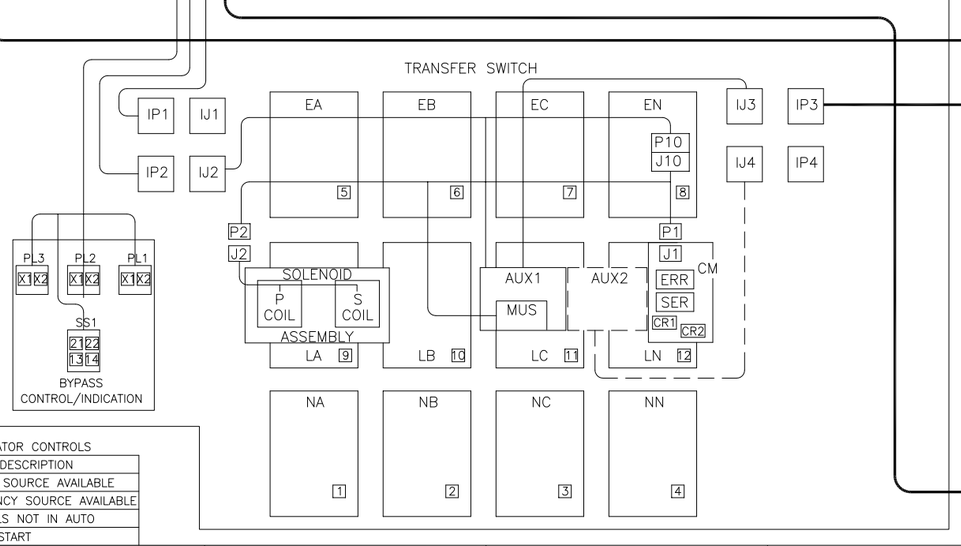

J1 CONNECTIONS
(CONTACTOR TO MAIN LOGIC BOARD)

PIN		
#1	N/C	.
2	1	(TB1–13)
3	21	(P11–2)
4	3	(TB1–15)
5	5	(TB1–17)
6	7	(TB1–19)
7	5	(TB1–17)
8	37	(TB1–31)
9	38	(TB1–30)
10	28	(P11–9)
11	2	(TB1–14)
12	1	(TB1–13)
13	30	(P11–10)
14	29	(P11–11)
15	N/C	.
16	24	(P11–5)
17	N/C	.
18	6	(TB1–18)
19	N/C	.
20	N/C	.
21	N/C	.
22	4	(TB1–16)
23	8	(TB1–20)
24	N/C	.

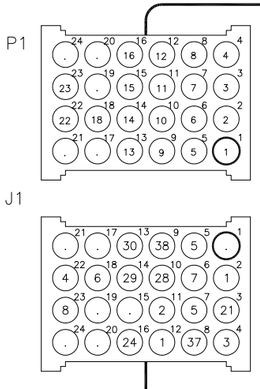

OPERATOR CONTROLS

ID	DESCRIPTION
PL1	NORMAL SOURCE AVAILABLE
PL2	EMERGENCY SOURCE AVAILABLE
PL3	CONTROLS NOT IN AUTO
SS1	ENGINE START

MODEL KBS
1600–4000A
BYPASS (B) MECHANISM
STANDARD TRANSITION
FOR SCHEMATIC DIAGRAM SEE GM89674

UNLESS OTHERWISE SPECIFIED –
1) DIMENSIONS ARE IN INCHES
2) TOLERANCES ARE:
.XXX ± .010 ANGLES ± 1/2°
.XX ± .030 SURFACE FINISH
.X ± .060 ✓ MAX.
FRACTIONS ±

APPROVALS		DATE
DRAWN	DFS	11–22–13
CHECKED	MTL	11–22–13
APPROVED	HCC	11–22–13

KOHLER CO.
POWER SYSTEMS, KOHLER, WI 53044 U.S.A.
THIS DRAWING, IN DESIGN AND DETAIL, IS KOHLER CO. PROPERTY AND MUST NOT BE USED EXCEPT IN CONNECTION WITH KOHLER CO. WORK.
ALL RIGHTS OF DESIGN OR INVENTION ARE RESERVED.

TITLE: DIAGRAM, WIRING

SCALE / / / | CAD NO. | SHEET 1–1
PLOTTED | DWG. NO. GM89673 | D

REV	DATE	REVISION	BY	M F
–	11–12–13	NEW DRAWING [CT55093]	DFS	
A	8–17–15	(D–8) TB2 MODBUS CONNECTION VIEW UPDATED; [CT120983]	BTW	

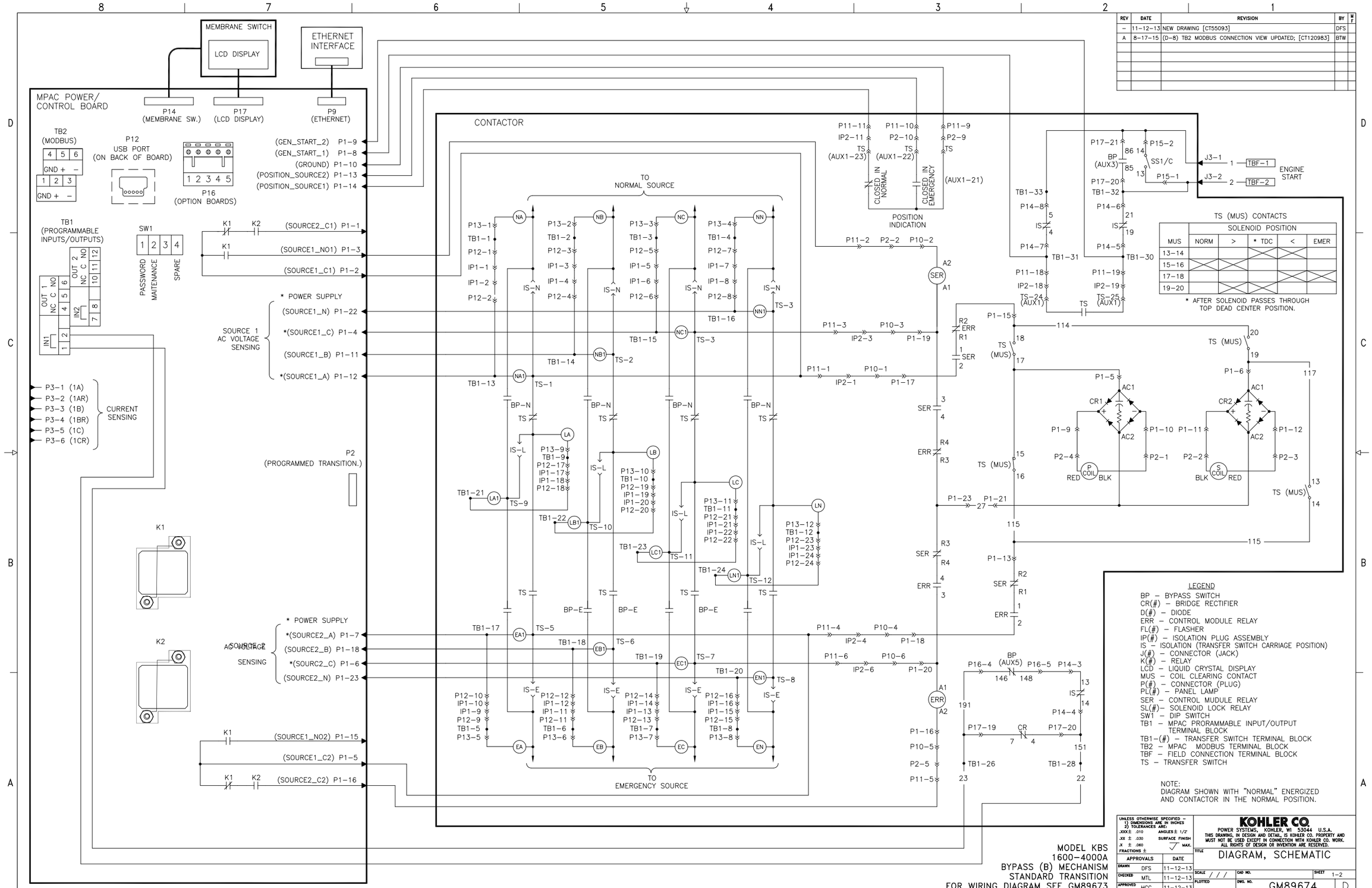

MODEL KBS
1600–4000A
BYPASS (B) MECHANISM
STANDARD TRANSITION
FOR WIRING DIAGRAM SEE GM89673

UNLESS OTHERWISE SPECIFIED – 1) DIMENSIONS ARE IN INCHES 2) TOLERANCES ARE: .XXX ± .010 ANGLES ± 1/2° .XX ± .030 SURFACE FINISH .X ± .060 ✓ MAX. FRACTIONS ±

APPROVALS		DATE
DRAWN	DFS	11–12–13
CHECKED	MTL	11–12–13
APPROVED	HCC	11–12–13

KOHLER CO.
POWER SYSTEMS, KOHLER, WI 53044 U.S.A.
THIS DRAWING, IN DESIGN AND DETAIL, IS KOHLER CO. PROPERTY AND MUST NOT BE USED EXCEPT IN CONNECTION WITH KOHLER CO. WORK. ALL RIGHTS OF DESIGN OR INVENTION ARE RESERVED.

TITLE: DIAGRAM, SCHEMATIC
SCALE / / / | CAD NO. | SHEET 1–2
PLOTTED | DWG. NO. GM89674 | D

REV	DATE	REVISION	BY	M F
–	11–12–13	NEW DRAWING [CT55093]	DFS	
A	8–17–15	SEE SHEET 1 [CT120983]	BTW	

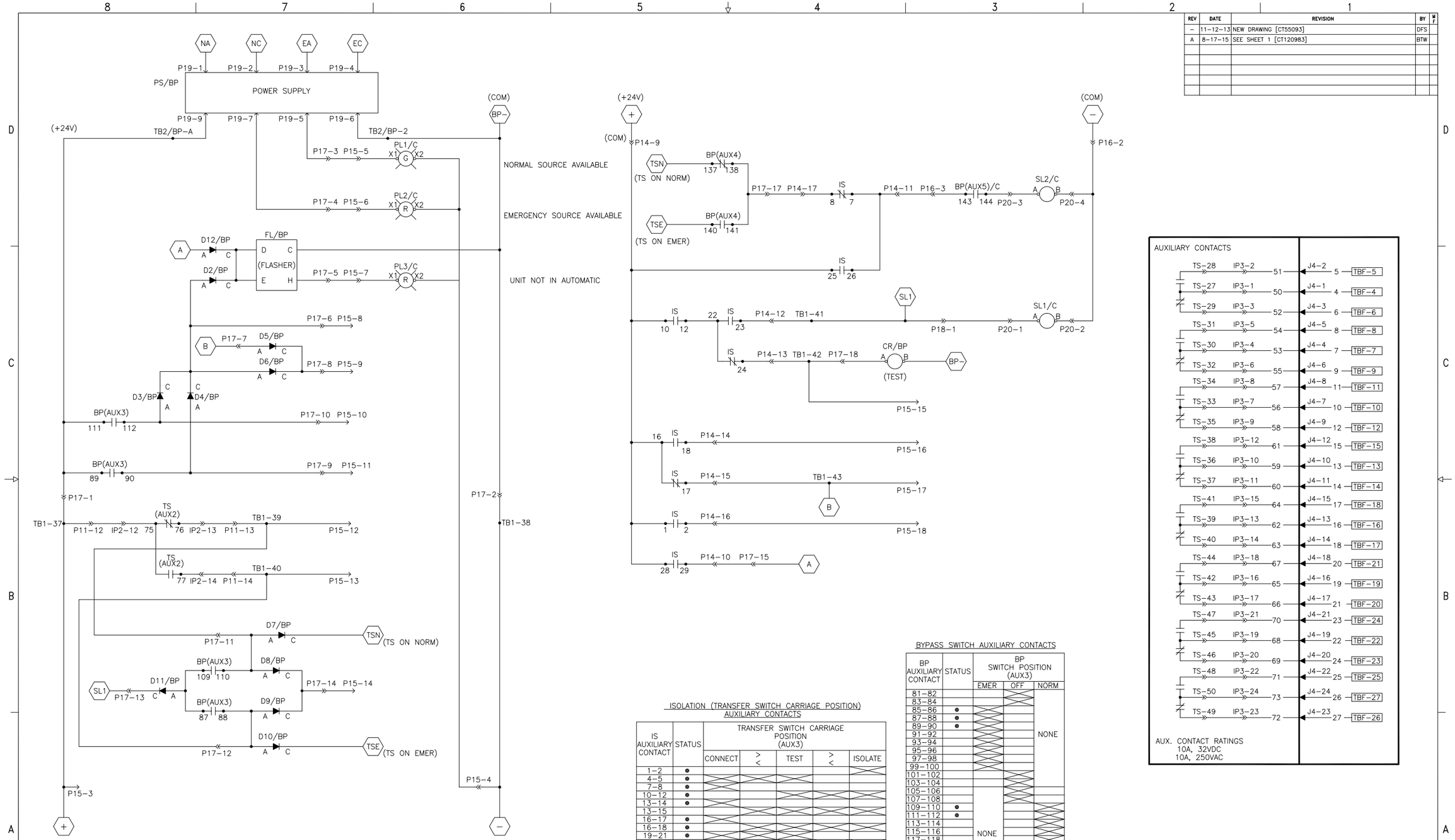

AUXILIARY CONTACTS

TS–28	IP3–2	51	J4–2	5	TBF–5
TS–27	IP3–1	50	J4–1	4	TBF–4
TS–29	IP3–3	52	J4–3	6	TBF–6
TS–31	IP3–5	54	J4–5	8	TBF–8
TS–30	IP3–4	53	J4–4	7	TBF–7
TS–32	IP3–6	55	J4–6	9	TBF–9
TS–34	IP3–8	57	J4–8	11	TBF–11
TS–33	IP3–7	56	J4–7	10	TBF–10
TS–35	IP3–9	58	J4–9	12	TBF–12
TS–38	IP3–12	61	J4–12	15	TBF–15
TS–36	IP3–10	59	J4–10	13	TBF–13
TS–37	IP3–11	60	J4–11	14	TBF–14
TS–41	IP3–15	64	J4–15	17	TBF–18
TS–39	IP3–13	62	J4–13	16	TBF–16
TS–40	IP3–14	63	J4–14	18	TBF–17
TS–44	IP3–18	67	J4–18	20	TBF–21
TS–42	IP3–16	65	J4–16	19	TBF–19
TS–43	IP3–17	66	J4–17	21	TBF–20
TS–47	IP3–21	70	J4–21	23	TBF–24
TS–45	IP3–19	68	J4–19	22	TBF–22
TS–46	IP3–20	69	J4–20	24	TBF–23
TS–48	IP3–22	71	J4–22	25	TBF–25
TS–50	IP3–24	73	J4–24	26	TBF–27
TS–49	IP3–23	72	J4–23	27	TBF–26

AUX. CONTACT RATINGS
10A, 32VDC
10A, 250VAC

BYPASS SWITCH OPERATOR AUXILIARY CONTACTS

BP AUXILIARY CONTACT	STATUS	BP SWITCH HANDLE POSITION (AUX5)		
		OFF (90°)	<> (75°)	BYPASS (–90°)
143–144	●			
143–145				
146–147				
146–148	●			

BYPASS SWITCH OPERATOR AUXILIARY CONTACTS

BP AUXILIARY CONTACT	STATUS	BP SWITCH POSITION (AUX4)		
		EMER (PULL)	<>	NORM (PUSH)
137–138	●			
137–139				
140–141	●			
140–142				

ISOLATION (TRANSFER SWITCH CARRIAGE POSITION) AUXILIARY CONTACTS

IS AUXILIARY CONTACT	STATUS	TRANSFER SWITCH CARRIAGE POSITION (AUX3)				
		CONNECT	> <	TEST	> <	ISOLATE
1–2	●					
4–5	●					
7–8	●					
10–12	●					
13–14	●					
13–15						
16–17	●					
16–18	●					
19–21	●					
22–23	●					
22–24	●					
25–26	●					
28–29	●					
61–62						

BYPASS SWITCH AUXILIARY CONTACTS

BP AUXILIARY CONTACT	STATUS	BP SWITCH POSITION (AUX3)		
		EMER	OFF	NORM
81–82				
83–84				
85–86	●			
87–88	●			
89–90	●			
91–92				
93–94				
95–96				
97–98				
99–100				
101–102				
103–104				
105–106				
107–108				
109–110	●			
111–112	●			
113–114				
115–116				
117–118				
119–120				
121–122				
123–124				
125–126				
127–128				

NONE

NONE

MODEL KBS
1600–4000A
BYPASS (B) MECHANISM
STANDARD TRANSITION
FOR WIRING DIAGRAM SEE GM89673

UNLESS OTHERWISE SPECIFIED –
1) DIMENSIONS ARE IN INCHES
2) TOLERANCES ARE:
.XXX ± .010 ANGLES ± 1/2°
.XX ± .030 SURFACE FINISH
.X ± .060 √ MAX.
FRACTIONS ±

APPROVALS		DATE
DRAWN	DFS	11–12–13
CHECKED	MTL	11–12–13
APPROVED	HCC	11–12–13

KOHLER CO.
POWER SYSTEMS, KOHLER, WI 53044 U.S.A.
THIS DRAWING, IN DESIGN AND DETAIL, IS KOHLER CO. PROPERTY AND MUST NOT BE USED EXCEPT IN CONNECTION WITH KOHLER CO. WORK. ALL RIGHTS OF DESIGN OR INVENTION ARE RESERVED.

TITLE DIAGRAM, SCHEMATIC

SCALE / / / | CAD NO. | SHEET 2–2
PLOTTED | DWG. NO. GM89674 | D

REV	DATE	REVISION	BY	M F
–	11–14–13	NEW DRAWING [CT55093]	DFS	
A	8–17–15	(D–8) TB2 MODBUS CONNECTION VIEW UPDATED; [CT120983]	BTW	

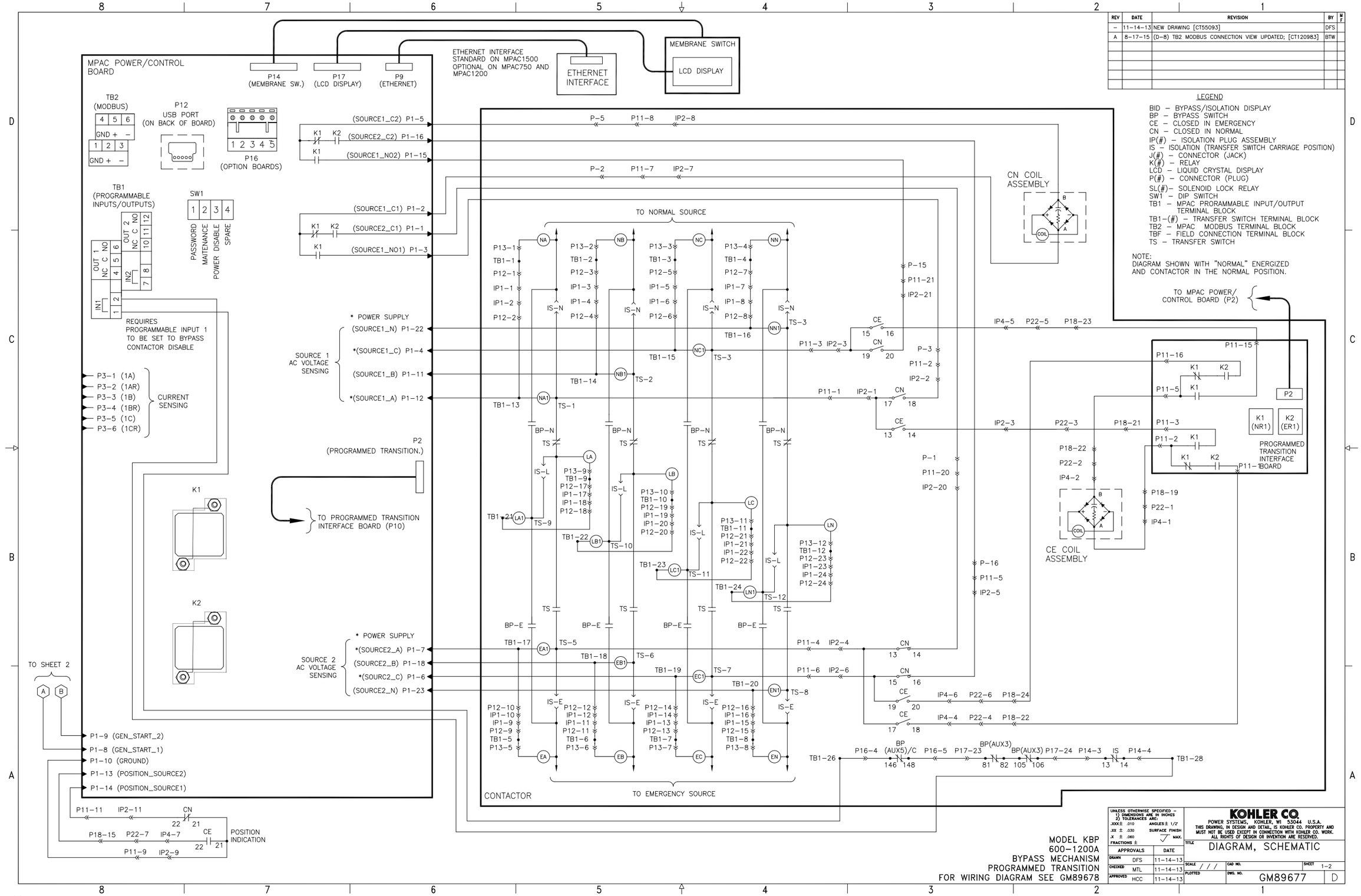

LEGEND

BID – BYPASS/ISOLATION DISPLAY
BP – BYPASS SWITCH
CE – CLOSED IN EMERGENCY
CN – CLOSED IN NORMAL
IP(#) – ISOLATION PLUG ASSEMBLY
IS – ISOLATION (TRANSFER SWITCH CARRIAGE POSITION)
J(#) – CONNECTOR (JACK)
K(#) – RELAY
LCD – LIQUID CRYSTAL DISPLAY
P(#) – CONNECTOR (PLUG)
SL(#)– SOLENOID LOCK RELAY
SW1 – DIP SWITCH
TB1 – MPAC PROGRAMMABLE INPUT/OUTPUT TERMINAL BLOCK
TB1–(#) – TRANSFER SWITCH TERMINAL BLOCK
TB2 – MPAC MODBUS TERMINAL BLOCK
TBF – FIELD CONNECTION TERMINAL BLOCK
TS – TRANSFER SWITCH

NOTE:
DIAGRAM SHOWN WITH "NORMAL" ENERGIZED AND CONTACTOR IN THE NORMAL POSITION.

MODEL KBP
600–1200A
BYPASS MECHANISM
PROGRAMMED TRANSITION
FOR WIRING DIAGRAM SEE GM89678

UNLESS OTHERWISE SPECIFIED – 1) DIMENSIONS ARE IN INCHES 2) TOLERANCES ARE: .XXX± .010 .XX ± .030 .X ± .060 FRACTIONS ± ANGLES ± 1/2° SURFACE FINISH MAX.

APPROVALS		DATE
DRAWN	DFS	11–14–13
CHECKED	MTL	11–14–13
APPROVED	HCC	11–14–13

KOHLER CO.
POWER SYSTEMS, KOHLER, WI 53044 U.S.A.
THIS DRAWING, IN DESIGN AND DETAIL, IS KOHLER CO. PROPERTY AND MUST NOT BE USED EXCEPT IN CONNECTION WITH KOHLER CO. WORK. ALL RIGHTS OF DESIGN OR INVENTION ARE RESERVED.

TITLE: DIAGRAM, SCHEMATIC
SCALE / / / | CAD NO. | SHEET 1–2
PLOTTED | DWG. NO. GM89677 | D

REV	DATE	REVISION	BY	M F
–	11–14–13	NEW DRAWING [CT55093]	DFS	
A	8–17–15	SEE SHEET 1 [CT120983]	BTW	

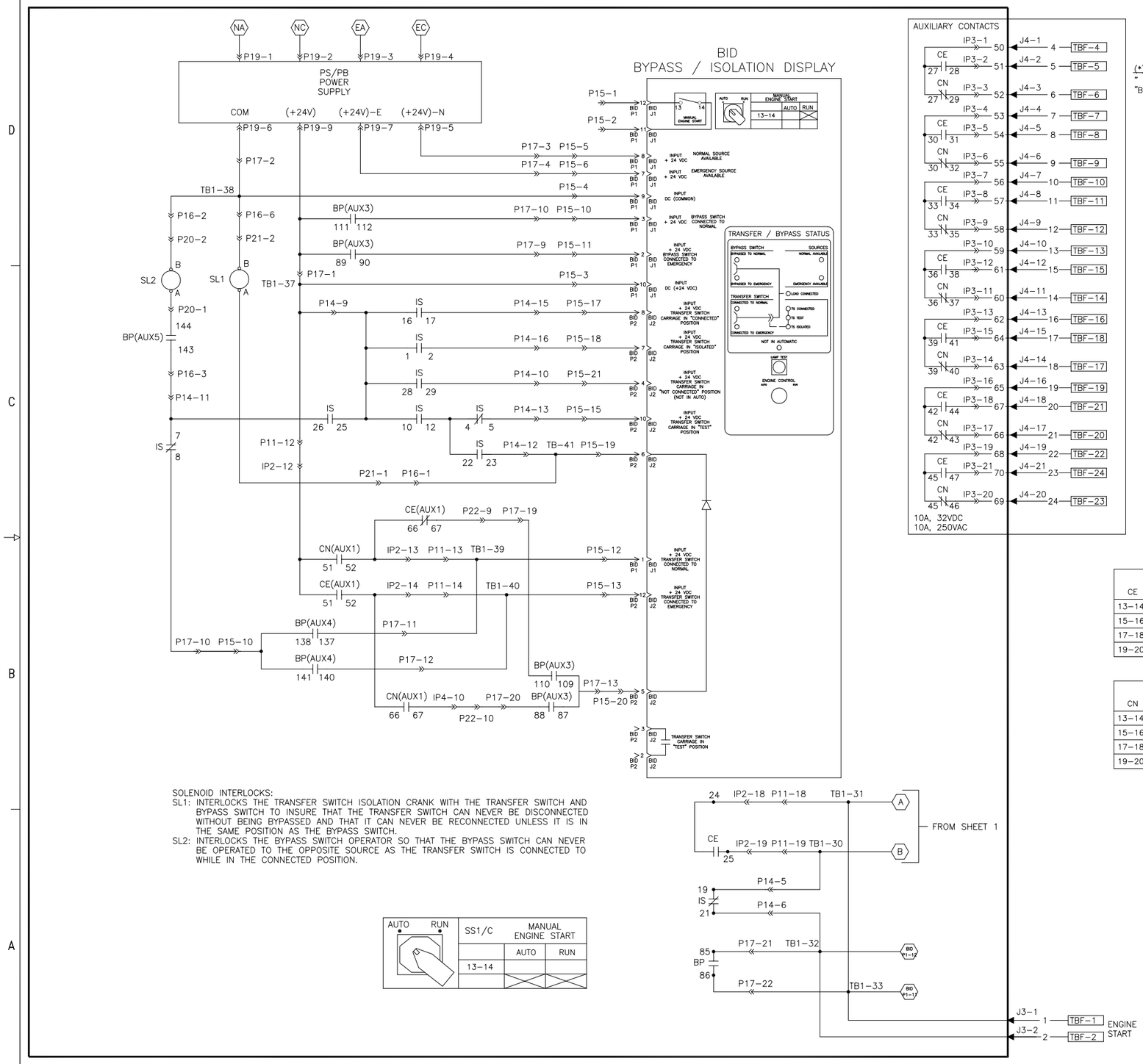

(*) CONTACT AVAILABILITY STATUS:
" " CONTACT PROVIDED & USED IN CIRCUITRY
"BLANK" CONTACT NOT USED. IF PHYSICALLY AVAILABLE. CONTACT IS FOR FACTORY USE ONLY

BYPASS SWITCH OPERATOR AUXILIARY CONTACTS

BP AUXILIARY CONTACT	STATUS (*)	BP SWITCH HANDLE POSITION (AUX4)		
		EMER (PULL)	<>	NORMAL (PUSH)
137–138	•			
137–139				
140–141	•			
140–142				

BYPASS SWITCH OPERATOR AUXILIARY CONTACTS

BP AUXILIARY CONTACT	STATUS (*)	BP SWITCH HANDLE POSITION (AUX5)		
		OFF (90°)	<> (75°)	BYPASS (–90°)
143–144	•			
143–145				
146–147				
146–148	•			

BYPASS SWITCH AUXILIARY CONTACTS

BP AUXILIARY CONTACT	STATUS (*)	BP SWITCH HANDLE POSITION (AUX3)		
		EMER	OFF	NORMAL
81–82				NONE
83–84				
85–86	•			
87–88	•			
89–90	•			
91–92				
93–94				
95–96				
97–98				
99–100				
101–102				
103–104				
105–106		NONE		
107–108				
109–110	•			
111–112	•			
113–114				
115–116				
117–118				
119–120				
121–122				
123–124				
125–126				
127–128				

CE CONTACTS

CE	SOLENOID POSITION				
	EMER	>	TDC *	<	OFF
13–14					
15–16					
17–18					
19–20					

CN CONTACTS

CN	SOLENOID POSITION				
	NORM	>	TDC *	<	OPEN
13–14					
15–16					
17–18					
19–20					

TDC – TOP DEAD CENTER POSITION.

ISOLATION (TRANSFER SWITCH CARRIAGE POSITION) AUXILIARY CONTACTS

IS AUXILIARY CONTACT	STATUS (*)	TRANSFER SWITCH CARRIAGE POSITION (AUX3)				
		CONNECT	> <	TEST	> <	ISOLATE
1–2	•					
4–5	•					
7–8	•					
10–12	•					
13–14	•					
13–15						
16–17	•					
16–18	•					
19–21	•					
22–23	•					
22–24	•					
25–26	•					
28–29	•					
61–62						

SOLENOID INTERLOCKS:
SL1: INTERLOCKS THE TRANSFER SWITCH ISOLATION CRANK WITH THE TRANSFER SWITCH AND BYPASS SWITCH TO INSURE THAT THE TRANSFER SWITCH CAN NEVER BE DISCONNECTED WITHOUT BEING BYPASSED AND THAT IT CAN NEVER BE RECONNECTED UNLESS IT IS IN THE SAME POSITION AS THE BYPASS SWITCH.
SL2: INTERLOCKS THE BYPASS SWITCH OPERATOR SO THAT THE BYPASS SWITCH CAN NEVER BE OPERATED TO THE OPPOSITE SOURCE AS THE TRANSFER SWITCH IS CONNECTED TO WHILE IN THE CONNECTED POSITION.

MODEL KBP
600–1200A
BYPASS MECHANISM
PROGRAMMED TRANSITION
FOR WIRING DIAGRAM SEE GM89678

UNLESS OTHERWISE SPECIFIED – 1) DIMENSIONS ARE IN INCHES 2) TOLERANCES ARE: .XXX ± .010 .XX ± .030 .X ± .060 FRACTIONS ± ANGLES ± 1/2° SURFACE FINISH MAX.

APPROVALS		DATE
DRAWN	DFS	11–14–13
CHECKED	MTL	11–14–13
APPROVED	HCC	11–14–13

KOHLER CO.
POWER SYSTEMS, KOHLER, WI 53044 U.S.A.
THIS DRAWING, IN DESIGN AND DETAIL, IS KOHLER CO. PROPERTY AND MUST NOT BE USED EXCEPT IN CONNECTION WITH KOHLER CO. WORK. ALL RIGHTS OF DESIGN OR INVENTION ARE RESERVED.

TITLE DIAGRAM, SCHEMATIC
SCALE / / / CAD NO. SHEET 2–2
PLOTTED DWG. NO. GM89677 D

REV	DATE	REVISION	BY	M F
–	11–22–13	NEW DRAWING [CT55093]	DFS	
A	8–17–15	(D–3) TB2 MODBUS CONNECTION VIEW UPDATED; [CT120983]	BTW	

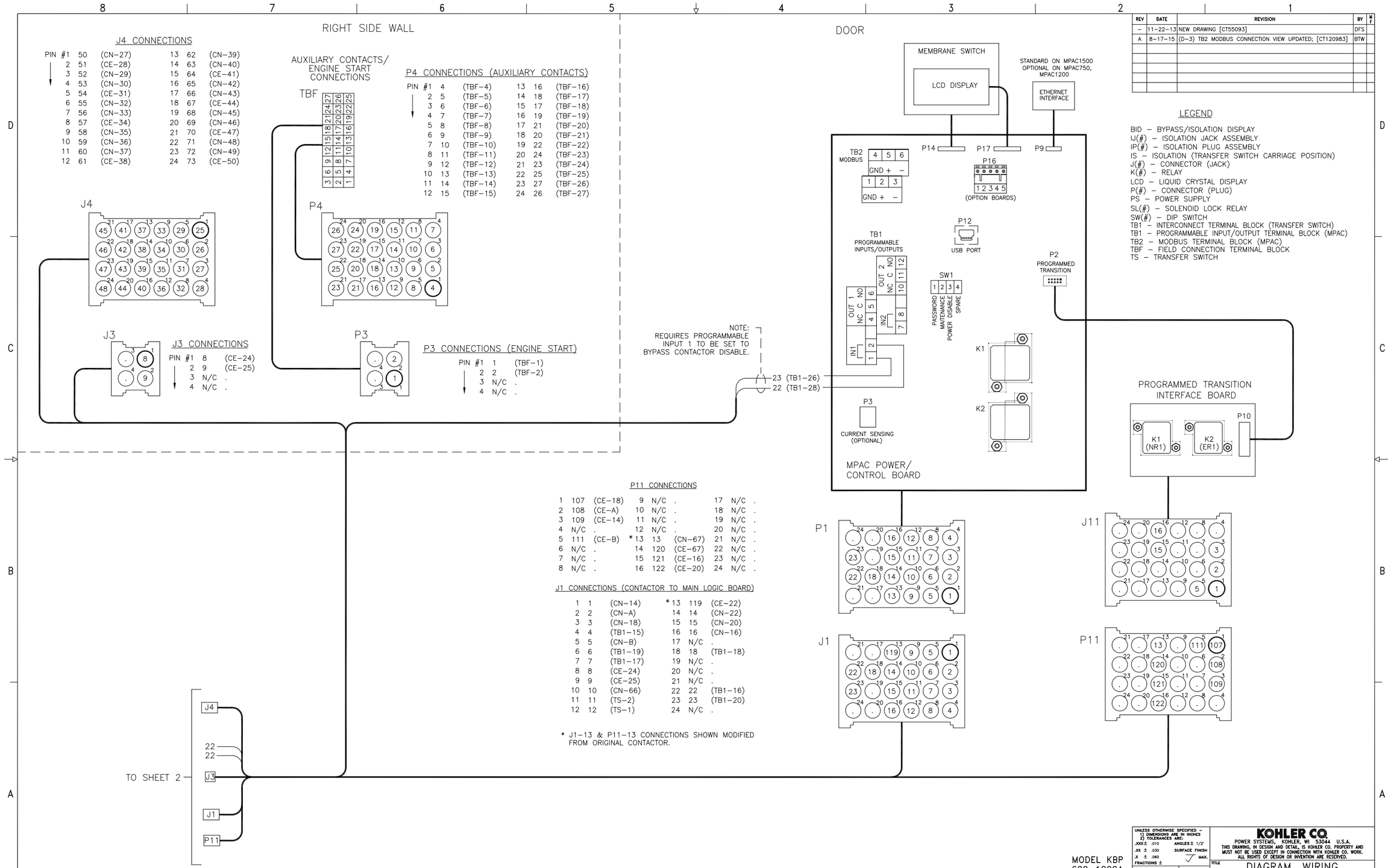

LEGEND

BID – BYPASS/ISOLATION DISPLAY
IJ(#) – ISOLATION JACK ASSEMBLY
IP(#) – ISOLATION PLUG ASSEMBLY
IS – ISOLATION (TRANSFER SWITCH CARRIAGE POSITION)
J(#) – CONNECTOR (JACK)
K(#) – RELAY
LCD – LIQUID CRYSTAL DISPLAY
P(#) – CONNECTOR (PLUG)
PS – POWER SUPPLY
SL(#) – SOLENOID LOCK RELAY
SW(#) – DIP SWITCH
TB1 – INTERCONNECT TERMINAL BLOCK (TRANSFER SWITCH)
TB1 – PROGRAMMABLE INPUT/OUTPUT TERMINAL BLOCK (MPAC)
TB2 – MODBUS TERMINAL BLOCK (MPAC)
TBF – FIELD CONNECTION TERMINAL BLOCK
TS – TRANSFER SWITCH

MODEL KBP
600–1200A
BYPASS MECHANISM
PROGRAMMED TRANSITION
FOR SCHEMATIC DIAGRAM SEE GM89677

UNLESS OTHERWISE SPECIFIED – 1) DIMENSIONS ARE IN INCHES 2) TOLERANCES ARE: .XXX ± .010 ANGLES ± 1/2° .XX ± .030 SURFACE FINISH .X ± .060 MAX. FRACTIONS ±

APPROVALS		DATE
DRAWN	DFS	11–22–13
CHECKED	MTL	11–22–13
APPROVED	HCC	11–22–13

KOHLER CO.
POWER SYSTEMS, KOHLER, WI 53044 U.S.A.
THIS DRAWING, IN DESIGN AND DETAIL, IS KOHLER CO. PROPERTY AND MUST NOT BE USED EXCEPT IN CONNECTION WITH KOHLER CO. WORK. ALL RIGHTS OF DESIGN OR INVENTION ARE RESERVED.

TITLE DIAGRAM, WIRING
SCALE / / / CAD NO. SHEET 1–2
PLOTTED DWG. NO. GM89678 D

REV	DATE	REVISION	BY	M F
–	11–22–13	NEW DRAWING [CT55093]	DFS	
A	8–17–15	SEE SHEET 1 [CT120983]	BTW	

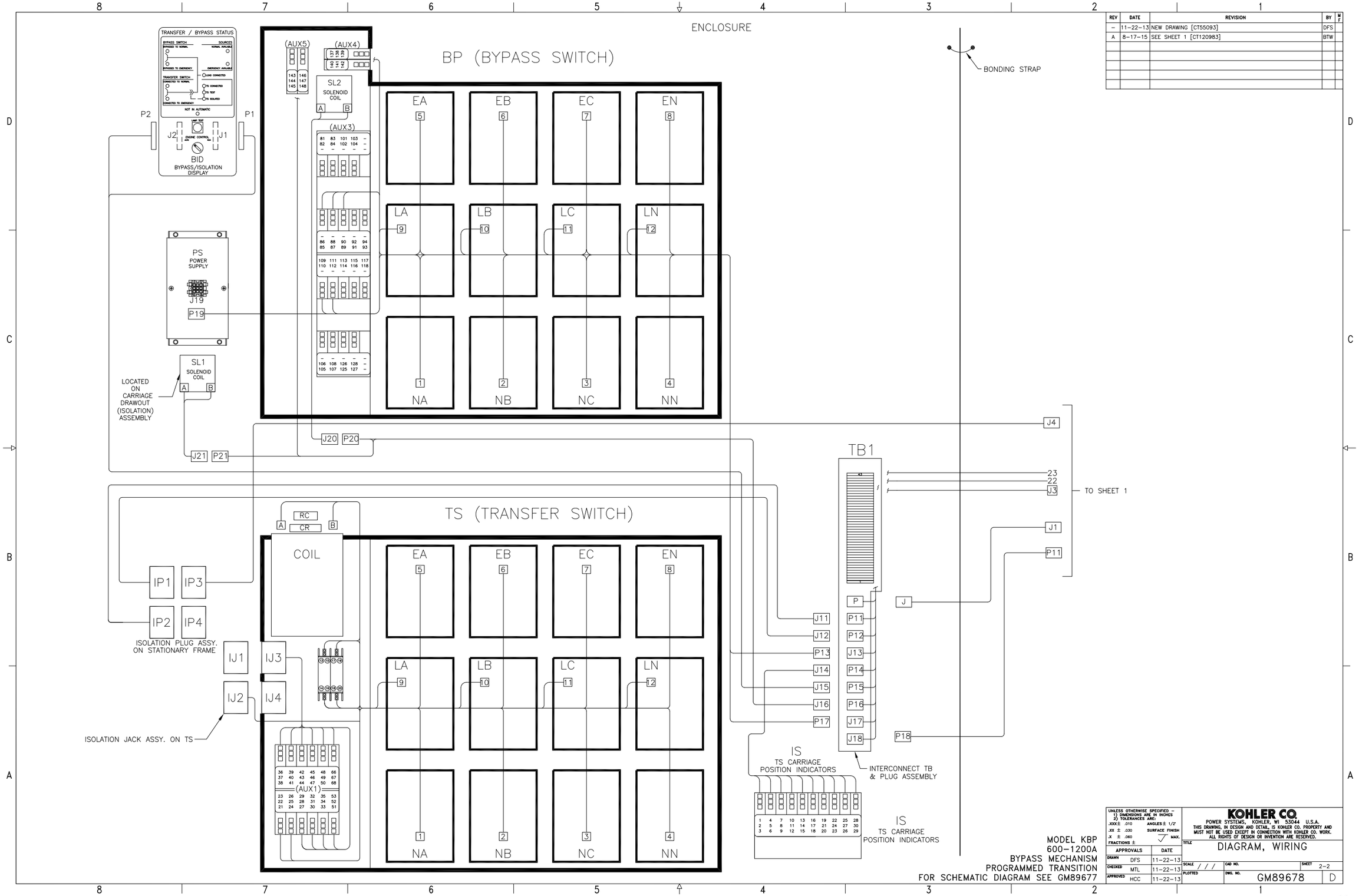

MODEL KBP
600–1200A
BYPASS MECHANISM
PROGRAMMED TRANSITION
FOR SCHEMATIC DIAGRAM SEE GM89677

UNLESS OTHERWISE SPECIFIED –
1) DIMENSIONS ARE IN INCHES
2) TOLERANCES ARE:
.XXX ± .010 ANGLES ± 1/2°
.XX ± .030 SURFACE FINISH
.X ± .060 √ MAX.
FRACTIONS ±

APPROVALS		DATE
DRAWN	DFS	11–22–13
CHECKED	MTL	11–22–13
APPROVED	HCC	11–22–13

KOHLER CO.
POWER SYSTEMS, KOHLER, WI 53044 U.S.A.

THIS DRAWING, IN DESIGN AND DETAIL, IS KOHLER CO. PROPERTY AND MUST NOT BE USED EXCEPT IN CONNECTION WITH KOHLER CO. WORK. ALL RIGHTS OF DESIGN OR INVENTION ARE RESERVED.

TITLE DIAGRAM, WIRING

SCALE / / / | CAD NO. | SHEET 2–2
PLOTTED | DWG. NO. GM89678 | D

REV	DATE	REVISION	BY	M F
–	11–14–13	NEW DRAWING [CT55093]	DFS	
A	8–17–15	(D–8) TB2 MODBUS CONNECTION VIEW UPDATED; [CT120983]	BTW	

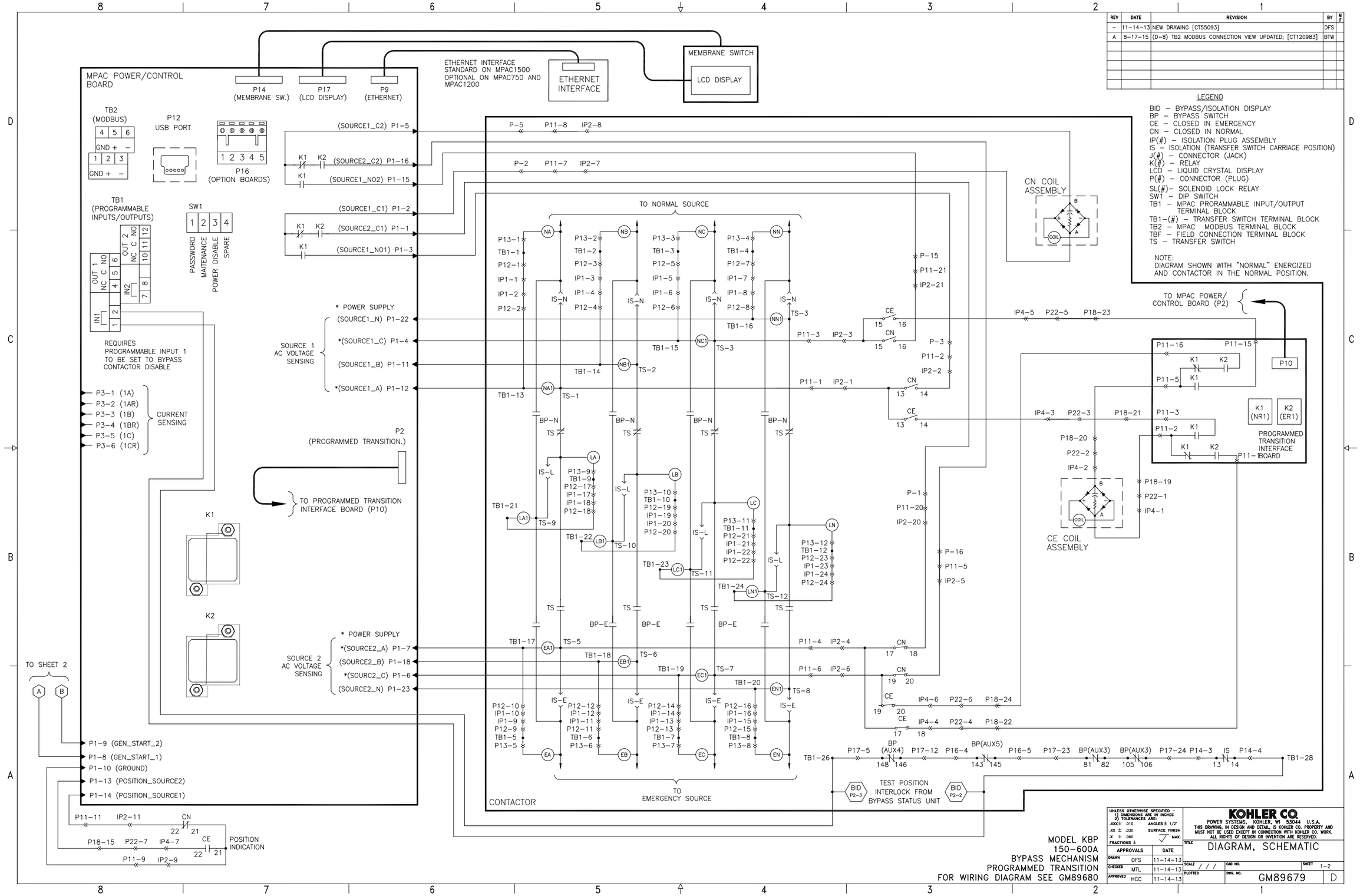

LEGEND

BID – BYPASS/ISOLATION DISPLAY
BP – BYPASS SWITCH
CE – CLOSED IN EMERGENCY
CN – CLOSED IN NORMAL
IP(#) – ISOLATION PLUG ASSEMBLY
IS – ISOLATION (TRANSFER SWITCH CARRIAGE POSITION)
J(#) – CONNECTOR (JACK)
K(#) – RELAY
LCD – LIQUID CRYSTAL DISPLAY
P(#) – CONNECTOR (PLUG)
SL(#)– SOLENOID LOCK RELAY
SW1 – DIP SWITCH
TB1 – MPAC PRORAMMABLE INPUT/OUTPUT TERMINAL BLOCK
TB1–(#) – TRANSFER SWITCH TERMINAL BLOCK
TB2 – MPAC MODBUS TERMINAL BLOCK
TBF – FIELD CONNECTION TERMINAL BLOCK
TS – TRANSFER SWITCH

NOTE:
DIAGRAM SHOWN WITH "NORMAL" ENERGIZED AND CONTACTOR IN THE NORMAL POSITION.

MODEL KBP
150–600A
BYPASS MECHANISM
PROGRAMMED TRANSITION
FOR WIRING DIAGRAM SEE GM89680

UNLESS OTHERWISE SPECIFIED – 1) DIMENSIONS ARE IN INCHES 2) TOLERANCES ARE: .XXX ± .010 ANGLES ± 1/2° .XX ± .030 SURFACE FINISH .X ± .060 MAX. FRACTIONS ±

APPROVALS		DATE
DRAWN	DFS	11–14–13
CHECKED	MTL	11–14–13
APPROVED	HCC	11–14–13

KOHLER CO.
POWER SYSTEMS, KOHLER, WI 53044 U.S.A.
THIS DRAWING, IN DESIGN AND DETAIL, IS KOHLER CO. PROPERTY AND MUST NOT BE USED EXCEPT IN CONNECTION WITH KOHLER CO. WORK. ALL RIGHTS OF DESIGN OR INVENTION ARE RESERVED.

TITLE: DIAGRAM, SCHEMATIC
SCALE / / / CAD NO. SHEET 1–2
PLOTTED DWG. NO. GM89679 D

REV	DATE	REVISION	BY	MF
–	11-14-13	NEW DRAWING [CT55093]	DFS	
A	8-17-15	SEE SHEET 1 [CT120983]	BTW	

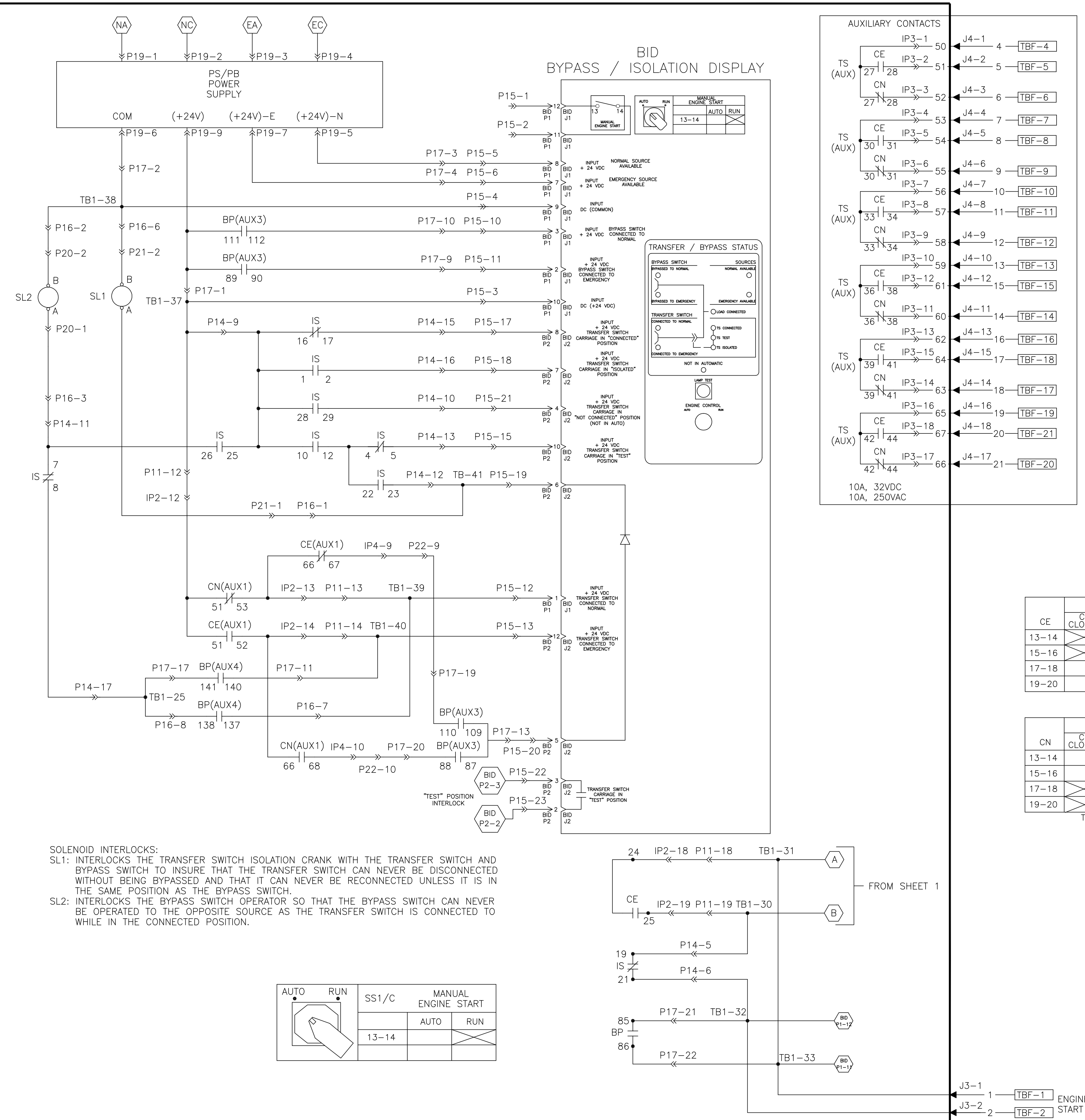

SOLENOID INTERLOCKS:
SL1: INTERLOCKS THE TRANSFER SWITCH ISOLATION CRANK WITH THE TRANSFER SWITCH AND BYPASS SWITCH TO INSURE THAT THE TRANSFER SWITCH CAN NEVER BE DISCONNECTED WITHOUT BEING BYPASSED AND THAT IT CAN NEVER BE RECONNECTED UNLESS IT IS IN THE SAME POSITION AS THE BYPASS SWITCH.
SL2: INTERLOCKS THE BYPASS SWITCH OPERATOR SO THAT THE BYPASS SWITCH CAN NEVER BE OPERATED TO THE OPPOSITE SOURCE AS THE TRANSFER SWITCH IS CONNECTED TO WHILE IN THE CONNECTED POSITION.

(*) CONTACT AVAILABILITY STATUS:
"⊛" CONTACT PROVIDED & USED IN CIRCUITRY
"BLANK" CONTACT NOT USED. IF PHYSICALLY AVAILABLE. CONTACT IS FOR FACTORY USE ONLY

BYPASS SWITCH AUXILIARY CONTACTS

BP AUXILIARY CONTACT	STATUS (*)	BP SWITCH POSITION (AUX3)		
		EMERG	OFF	NORMAL
81-82	⊛		X	///
83-84			X	///
85-86	⊛	X		///
87-88	⊛	X		///
89-90	⊛	X		///
91-92		X		///
93-94		X		///
101-102			X	///
103-104			X	///
105-106	⊛	///	X	
107-108		///	X	
109-110	⊛	///		X
111-112	⊛	///		X
113-114		///		X
115-116		///		X
117-118		///		X
125-126		///	X	
127-128		///	X	

BYPASS SWITCH OPERATOR AUXILIARY CONTACTS

	BP AUXILIARY CONTACT	STATUS (*)	BP SWITCH HANDLE POSITION				
			NORMAL (CCW)		OFF	EMERGENCY (CW)	
			BYPASS (±90°)	<> ±20°		<> ±20°	BYPASS (±90°)
(AUX4)	140-141	⊛				X	X
	140-142	⊛	X	X	X		
	146-147	⊛				X	X
	146-148	⊛	X	X			
(AUX5)	137-138	⊛	X	X			
	137-139	⊛				X	X
	143-144	⊛	X	X			
	143-145	⊛			X	X	X

CE CONTACTS

CE	SOLENOID POSITION				
	CE CLOSED	>	TDC *	<	CE OPEN
13-14	X	X			
15-16	X	X			
17-18				X	X
19-20				X	X

CN CONTACTS

CN	SOLENOID POSITION				
	CN CLOSED	>	TDC *	<	CN OPEN
13-14				X	X
15-16				X	X
17-18	X	X			
19-20	X	X			

TDC – TOP DEAD CENTER POSITION.

ISOLATION (TRANSFER SWITCH CARRIAGE POSITION) AUXILIARY CONTACTS

IS AUXILIARY CONTACT	STATUS (*)	TRANSFER SWITCH CARRIAGE POSITION				
		CONNECT	> <	TEST	> <	ISOLATE
1-2	⊛					X
1-3	⊛	X	X	X	X	
4-5	⊛	X	X	X		
4-6	⊛				X	X
7-8	⊛	X				
7-9	⊛		X	X	X	X
10-11	⊛	X	X			
10-12	⊛			X	X	X
13-14	⊛	X				
13-15	⊛		X	X	X	X
16-17	⊛	X				
16-18	⊛		X	X	X	X
19-20	⊛				X	X
19-21	⊛	X	X	X		
22-23	⊛				X	X
22-24	⊛	X	X	X		
25-26	⊛			X	X	X
25-27	⊛	X	X			
28-29	⊛			X	X	X
28-30	⊛	X	X			

MODEL KBP
150-600A
BYPASS MECHANISM
PROGRAMMED TRANSITION
FOR WIRING DIAGRAM SEE GM89680

UNLESS OTHERWISE SPECIFIED – 1) DIMENSIONS ARE IN INCHES 2) TOLERANCES ARE: .XXX ± .010 ANGLES ± 1/2° .XX ± .030 SURFACE FINISH .X ± .060 MAX. FRACTIONS ±

APPROVALS		DATE
DRAWN	DFS	11-14-13
CHECKED	MTL	11-14-13
APPROVED	HCC	11-14-13

KOHLER CO.
POWER SYSTEMS, KOHLER, WI 53044 U.S.A.
THIS DRAWING, IN DESIGN AND DETAIL, IS KOHLER CO. PROPERTY AND MUST NOT BE USED EXCEPT IN CONNECTION WITH KOHLER CO. WORK. ALL RIGHTS OF DESIGN OR INVENTION ARE RESERVED.

TITLE: DIAGRAM, SCHEMATIC
SCALE / / / CAD NO. SHEET 2-2
PLOTTED DWG. NO. GM89679 D

REV	DATE	REVISION	BY	M F
–	11–22–13	NEW DRAWING [CT550093]	DFS	
A	8–17–15	(D–3) TB2 MODBUS CONNECTION VIEW UPDATED; [CT120983]	BTW	

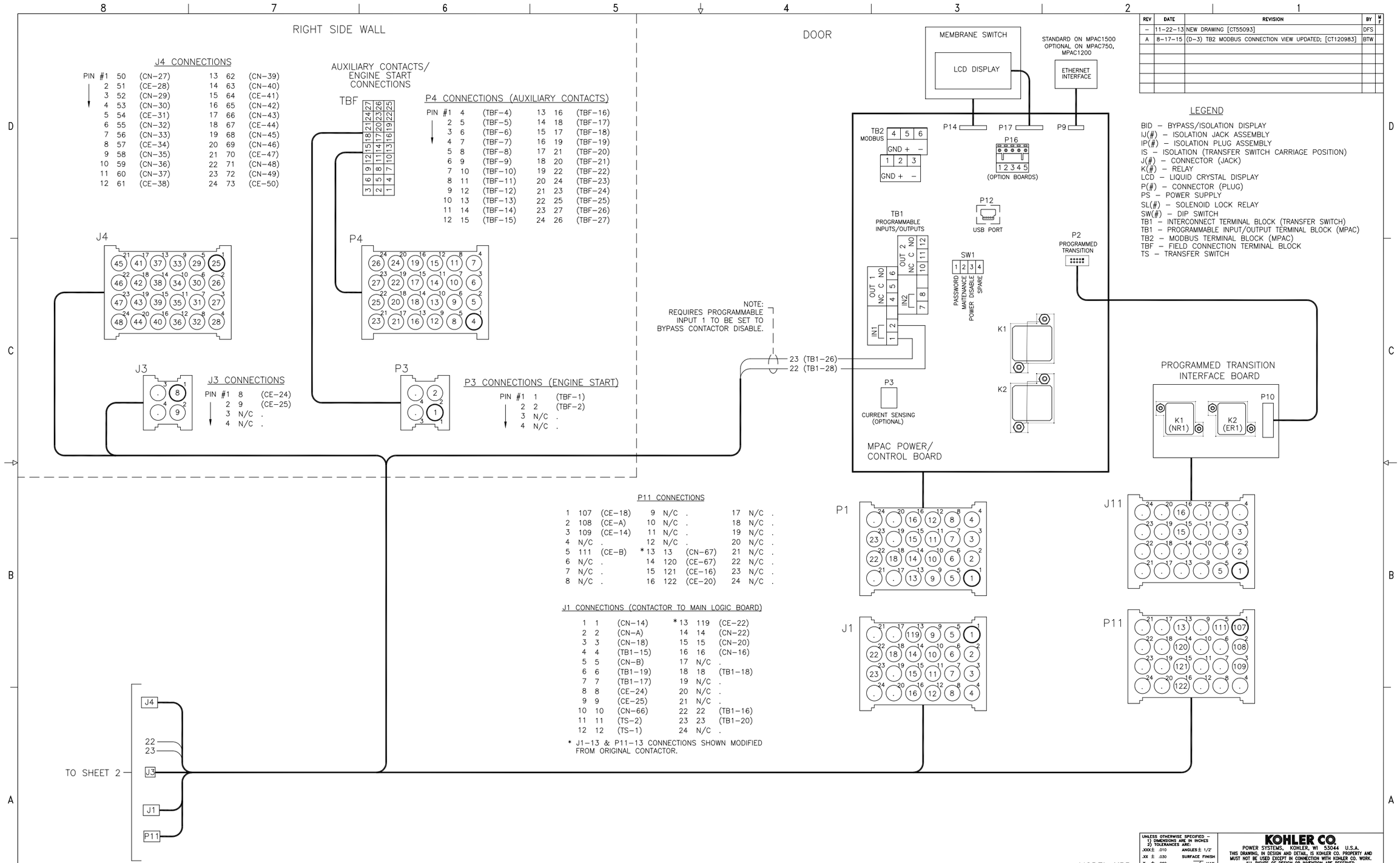

LEGEND

BID – BYPASS/ISOLATION DISPLAY
IJ(#) – ISOLATION JACK ASSEMBLY
IP(#) – ISOLATION PLUG ASSEMBLY
IS – ISOLATION (TRANSFER SWITCH CARRIAGE POSITION)
J(#) – CONNECTOR (JACK)
K(#) – RELAY
LCD – LIQUID CRYSTAL DISPLAY
P(#) – CONNECTOR (PLUG)
PS – POWER SUPPLY
SL(#) – SOLENOID LOCK RELAY
SW(#) – DIP SWITCH
TB1 – INTERCONNECT TERMINAL BLOCK (TRANSFER SWITCH)
TB1 – PROGRAMMABLE INPUT/OUTPUT TERMINAL BLOCK (MPAC)
TB2 – MODBUS TERMINAL BLOCK (MPAC)
TBF – FIELD CONNECTION TERMINAL BLOCK
TS – TRANSFER SWITCH

MODEL KBP
150–600A
BYPASS MECHANISM
PROGRAMMED TRANSITION
FOR SCHEMATIC DIAGRAM SEE GM89679

UNLESS OTHERWISE SPECIFIED – 1) DIMENSIONS ARE IN INCHES 2) TOLERANCES ARE:
.XXX± .010 ANGLES ± 1/2°
.XX ± .030 SURFACE FINISH
.X ± .060 MAX.
FRACTIONS ±

APPROVALS		DATE
DRAWN	DFS	11–22–13
CHECKED	MTL	11–22–13
APPROVED	HCC	11–22–13

KOHLER CO.
POWER SYSTEMS, KOHLER, WI 53044 U.S.A.
THIS DRAWING, IN DESIGN AND DETAIL, IS KOHLER CO. PROPERTY AND MUST NOT BE USED EXCEPT IN CONNECTION WITH KOHLER CO. WORK. ALL RIGHTS OF DESIGN OR INVENTION ARE RESERVED.

TITLE DIAGRAM, WIRING
SCALE / / / CAD NO. SHEET 1–2
PLOTTED DWG. NO. GM89680 D

REV	DATE	REVISION	BY	M F
–	11–22–13	NEW DRAWING [CT555093]	DFS	
A	8–17–15	NEW DRAWING [CT120983]	BTW	

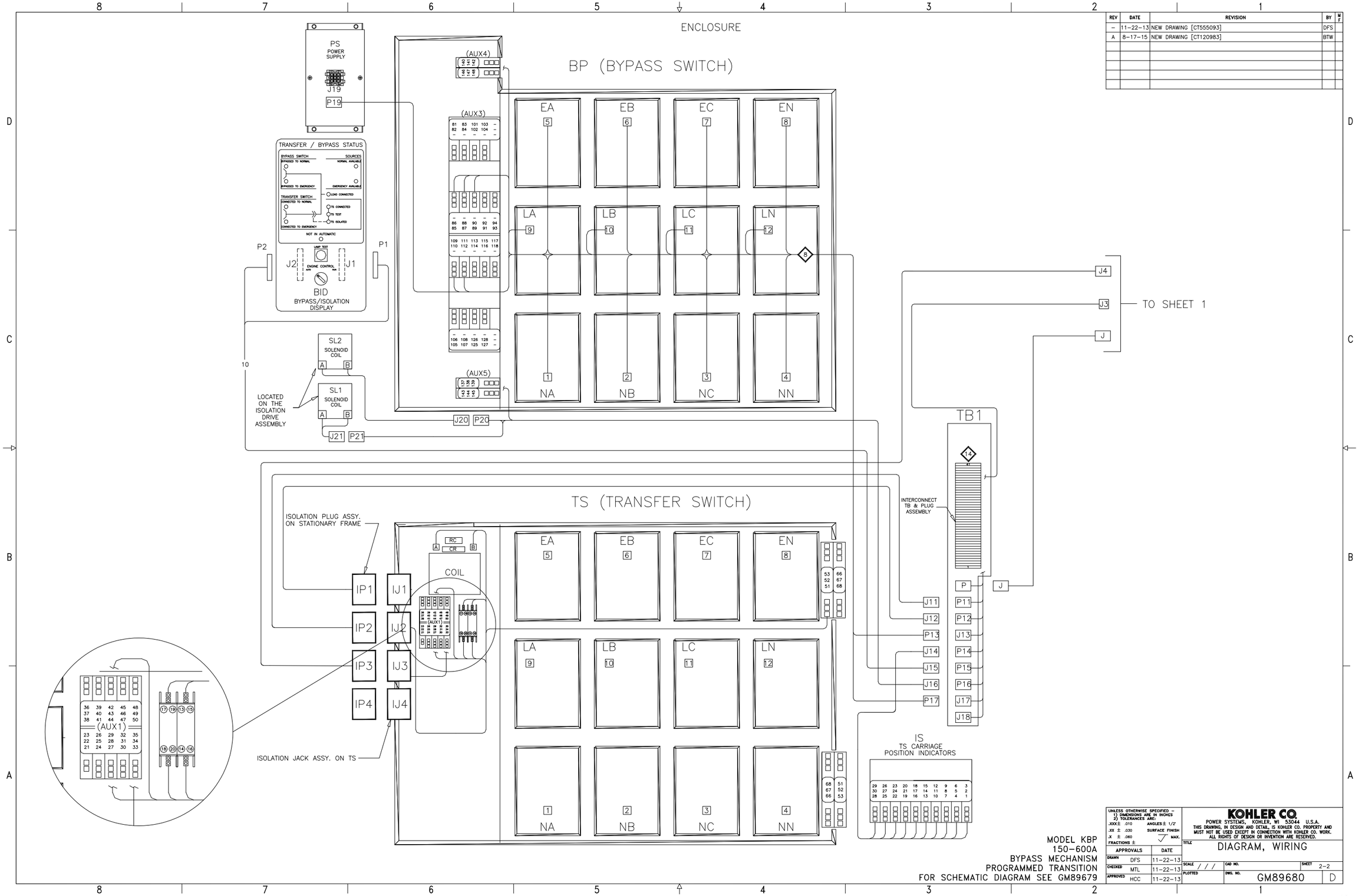

MODEL KBP
150–600A
BYPASS MECHANISM
PROGRAMMED TRANSITION
FOR SCHEMATIC DIAGRAM SEE GM89679

UNLESS OTHERWISE SPECIFIED –
1) DIMENSIONS ARE IN INCHES
2) TOLERANCES ARE:
.XXX ± .010 ANGLES ± 1/2°
.XX ± .030 SURFACE FINISH
.X ± .060 MAX.
FRACTIONS ±

APPROVALS		DATE
DRAWN	DFS	11–22–13
CHECKED	MTL	11–22–13
APPROVED	HCC	11–22–13

KOHLER CO.
POWER SYSTEMS, KOHLER, WI 53044 U.S.A.

THIS DRAWING, IN DESIGN AND DETAIL, IS KOHLER CO. PROPERTY AND MUST NOT BE USED EXCEPT IN CONNECTION WITH KOHLER CO. WORK. ALL RIGHTS OF DESIGN OR INVENTION ARE RESERVED.

TITLE DIAGRAM, WIRING

SCALE / / / | CAD NO. | SHEET 2–2
PLOTTED | DWG. NO. GM89680 | D

REV	DATE	REVISION	BY	M F
–	11–14–13	NEW DRAWING [CT55093]	DFS	
A	8–17–15	(D–8) TB2 MODBUS CONNECTION VIEW UPDATED; [CT120983]	BTW	

LEGEND

BP – BYPASS SWITCH
CE – CLOSED IN EMERGENCY
CN – CLOSED IN NORMAL
CR(#) – BRIDGE RECTIFIER
D(#) – DIODE
ERR – CONTROL MODULE RELAY
FL(#) – FLASHER
IP(#) – ISOLATION PLUG ASSEMBLY
IS – ISOLATION (TRANSFER SWITCH CARRIAGE POSITION)
J(#) – CONNECTOR (JACK)
K(#) – RELAY
LCD – LIQUID CRYSTAL DISPLAY
MUS – COIL CLEARING CONTACTS
P(#) – CONNECTOR (PLUG)
SER – CONTROL MODULE RELAY
SL(#)– SOLENOID LOCK RELAY
SW1 – DIP SWITCH
TB1 – MPAC PRORAMMABLE INPUT/OUTPUT TERMINAL BLOCK
TB1–(#) – TRANSFER SWITCH TERMINAL BLOCK
TB2 – MPAC MODBUS TERMINAL BLOCK
TBF – FIELD CONNECTION TERMINAL BLOCK
TS – TRANSFER SWITCH

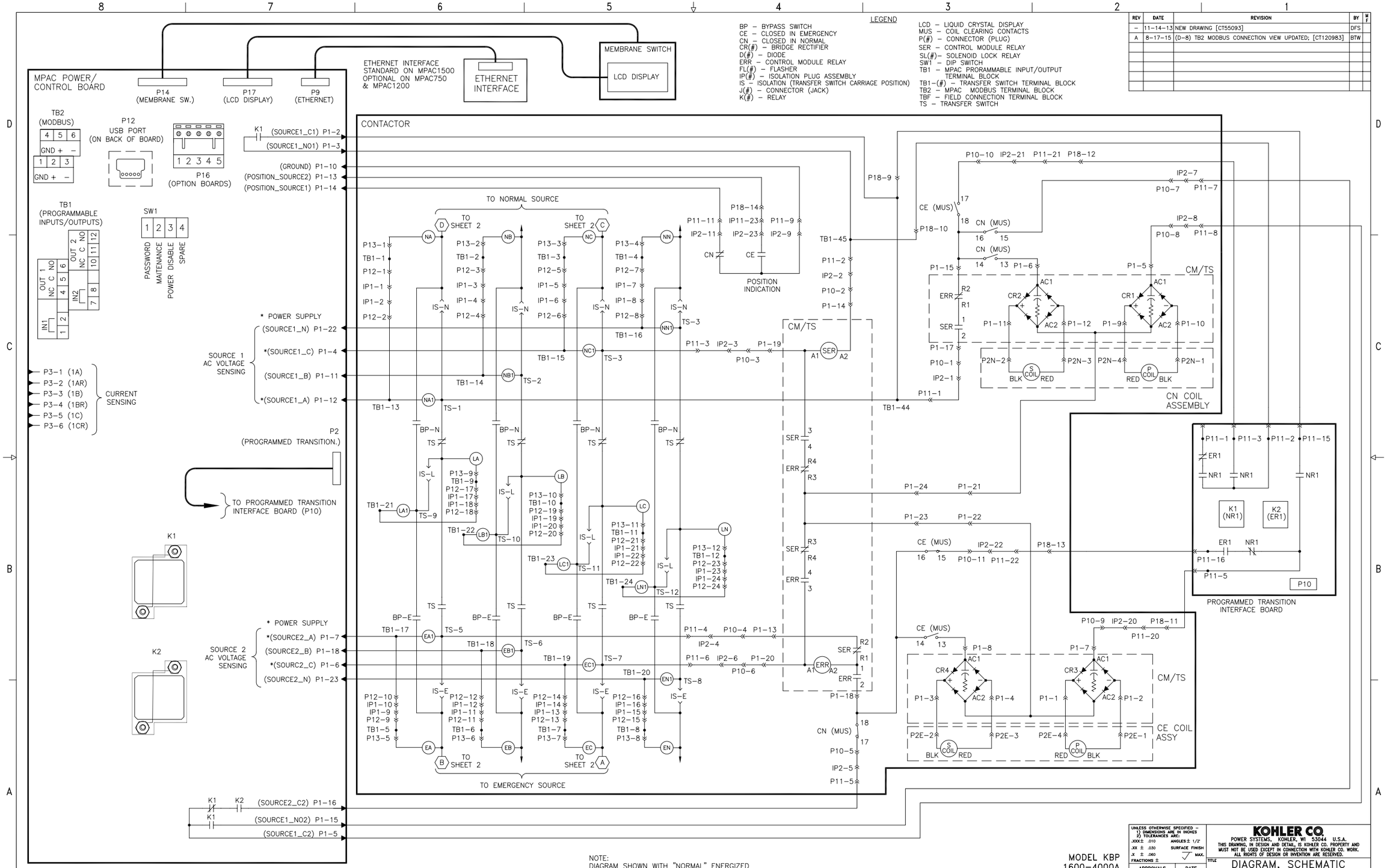

NOTE:
DIAGRAM SHOWN WITH "NORMAL" ENERGIZED AND CONTACTOR IN THE NORMAL POSITION.

MODEL KBP
1600–4000A
BYPASS MECHANISM
PROGRAMMED TRANSITION
FOR WIRING DIAGRAM SEE GM89686

UNLESS OTHERWISE SPECIFIED – 1) DIMENSIONS ARE IN INCHES 2) TOLERANCES ARE:
.XXX± .010 ANGLES ± 1/2°
.XX ± .030 SURFACE FINISH
.X ± .060 MAX.
FRACTIONS ±

APPROVALS		DATE
DRAWN	DFS	11–14–13
CHECKED	MTL	11–14–13
APPROVED	HCC	11–14–13

KOHLER CO.
POWER SYSTEMS, KOHLER, WI 53044 U.S.A.
THIS DRAWING, IN DESIGN AND DETAIL, IS KOHLER CO. PROPERTY AND MUST NOT BE USED EXCEPT IN CONNECTION WITH KOHLER CO. WORK. ALL RIGHTS OF DESIGN OR INVENTION ARE RESERVED.

TITLE: DIAGRAM, SCHEMATIC
SCALE: / / / CAD NO. SHEET 1–2
PLOTTED DWG. NO. GM89685 D

REV	DATE	REVISION	BY	M F
–	11–14–13	NEW DRAWING [CT55093]	DFS	
A	8–17–15	SEE SHEET 1 [CT120983]	BTW	

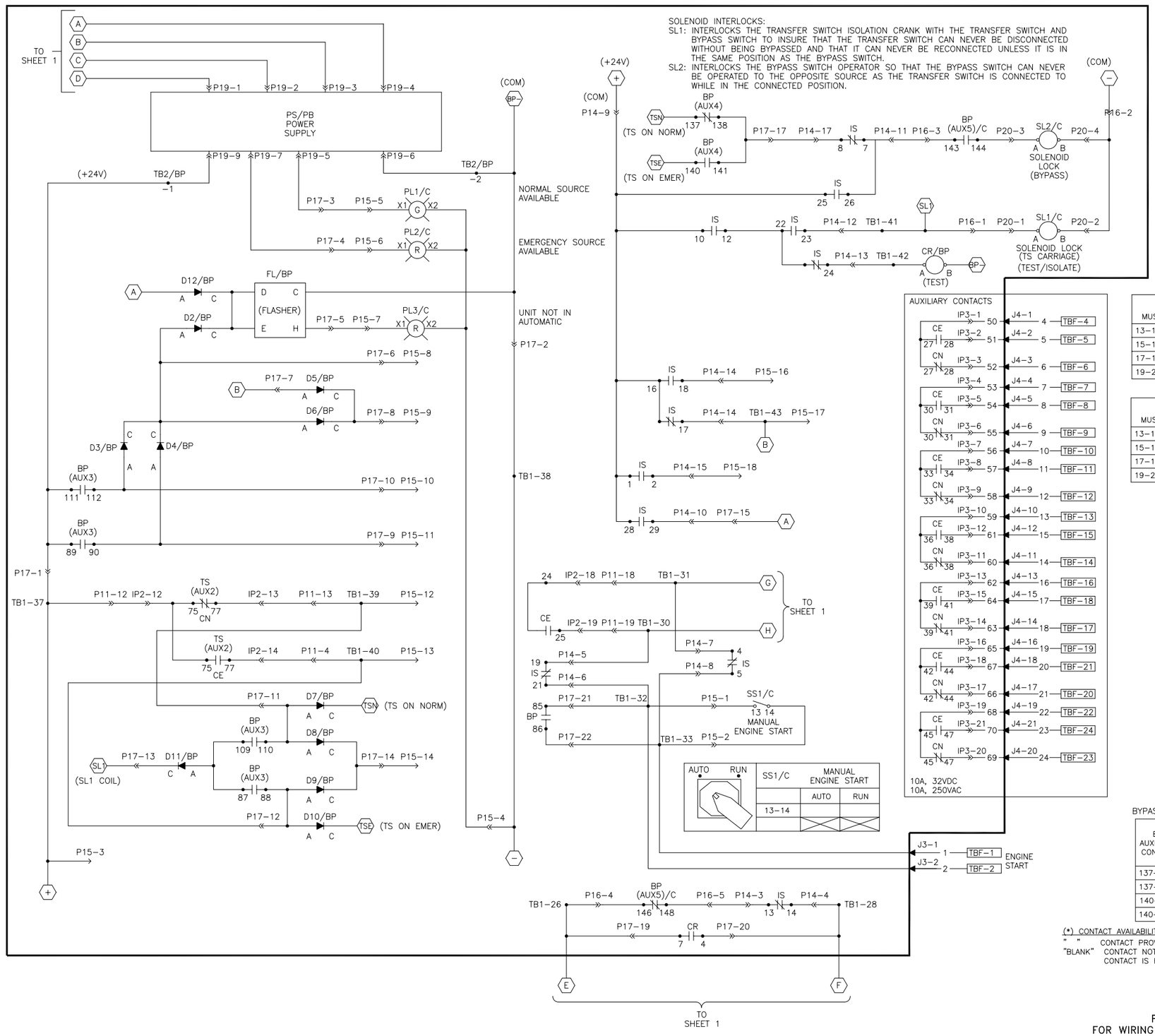

BYPASS SWITCH AUXILIARY CONTACTS

BP AUXILIARY CONTACT	STATUS (*)	BP SWITCH HANDLE POSITION (AUX3) EMER	OFF	NORMAL
81–82			X	NONE
83–84			X	
85–86	•	X		
87–88	•	X		
89–90	•	X		
91–92		X		
93–94		X		
95–96		X		
97–98		X		
99–100		X		
101–102			X	
103–104			X	
105–106		NONE	X	
107–108			X	
109–110	•			X
111–112	•			X
113–114				X
115–116				X
117–118				X
119–120				X
121–122				X
123–124				X
125–126			X	
127–128			X	

CE (MUS) CONTACTS

MUS	SOLENOID POSITION OPEN	>	AFTER TDC *	<	EMER
13–14			X	X	
15–16	X			X	
17–18				X	X
19–20		X	X		

CN (MUS) CONTACTS

MUS	SOLENOID POSITION NORM	>	AFTER TDC *	<	OPEN
13–14		X		X	
15–16	X			X	X
17–18	X				
19–20		X	X	X	

* AFTER SOLENOID PASSES THROUGH TOP DEAD CENTER POSITION.

ISOLATION (TRANSFER SWITCH CARRIAGE POSITION) AUXILIARY CONTACTS

IS AUXILIARY CONTACT	STATUS (*)	TRANSFER SWITCH CARRIAGE POSITION (AUX3) CONNECT	> <	TEST	> <	ISOLATE
1–2	•					X
4–5	•	X	X	X		
7–8	•	X		X		
10–12	•			X	X	X
13–14	•	X		X	X	X
13–15			X	X	X	X
16–17	•	X		X	X	X
16–18	•	X	X	X	X	X
19–21	•	X	X	X	X	X
22–23	•			X	X	X
22–24	•	X	X	X	X	X
25–26	•			X	X	X
28–29	•			X	X	X
61–62		X		X	X	X

BYPASS SWITCH OPERATOR AUXILIARY CONTACTS

BP AUXILIARY CONTACT	STATUS (*)	BP SWITCH HANDLE POSITION (AUX4) EMER (PULL)	<>	NORMAL (PUSH)
137–138	•			X
137–139		X	X	
140–141	•	X	X	
140–142			X	X

BYPASS SWITCH OPERATOR AUXILIARY CONTACTS

BP AUXILIARY CONTACT	STATUS (*)	BP SWITCH HANDLE POSITION (AUX5) OFF (90°)	<> (75°)	BYPASS (–90°)
143–144	•	X		
143–145		X	X	X
146–147		X		X
146–148	•	X		

(*) CONTACT AVAILABILITY STATUS;
" " CONTACT PROVIDED & USED IN CIRCUITRY
"BLANK" CONTACT NOT USED. IF PHYSICALLY AVAILABLE. CONTACT IS FOR FACTORY USE ONLY

MODEL KBP
1600–4000A
BYPASS MECHANISM
PROGRAMMED TRANSITION
FOR WIRING DIAGRAM SEE GM89686

UNLESS OTHERWISE SPECIFIED – 1) DIMENSIONS ARE IN INCHES 2) TOLERANCES ARE: .XXX± .010 ANGLES± 1/2° .XX ± .030 SURFACE FINISH .X ± .060 √ MAX. FRACTIONS ±

APPROVALS		DATE
DRAWN	DFS	11–14–13
CHECKED	MTL	11–14–13
APPROVED	HCC	11–14–13

KOHLER CO.
POWER SYSTEMS, KOHLER, WI 53044 U.S.A.
THIS DRAWING, IN DESIGN AND DETAIL, IS KOHLER CO. PROPERTY AND MUST NOT BE USED EXCEPT IN CONNECTION WITH KOHLER CO. WORK. ALL RIGHTS OF DESIGN OR INVENTION ARE RESERVED.

TITLE DIAGRAM, SCHEMATIC
SCALE / / / CAD NO. SHEET 2–2
PLOTTED DWG. NO. GM89685 D

REV	DATE	REVISION	BY	M F
–	11–22–13	NEW DRAWING [CT55093]	DFS	
A	8–17–15	(D–4) TB2 MODBUS CONNECTOR VIEW UPDATED; [CT120983]	BTW	

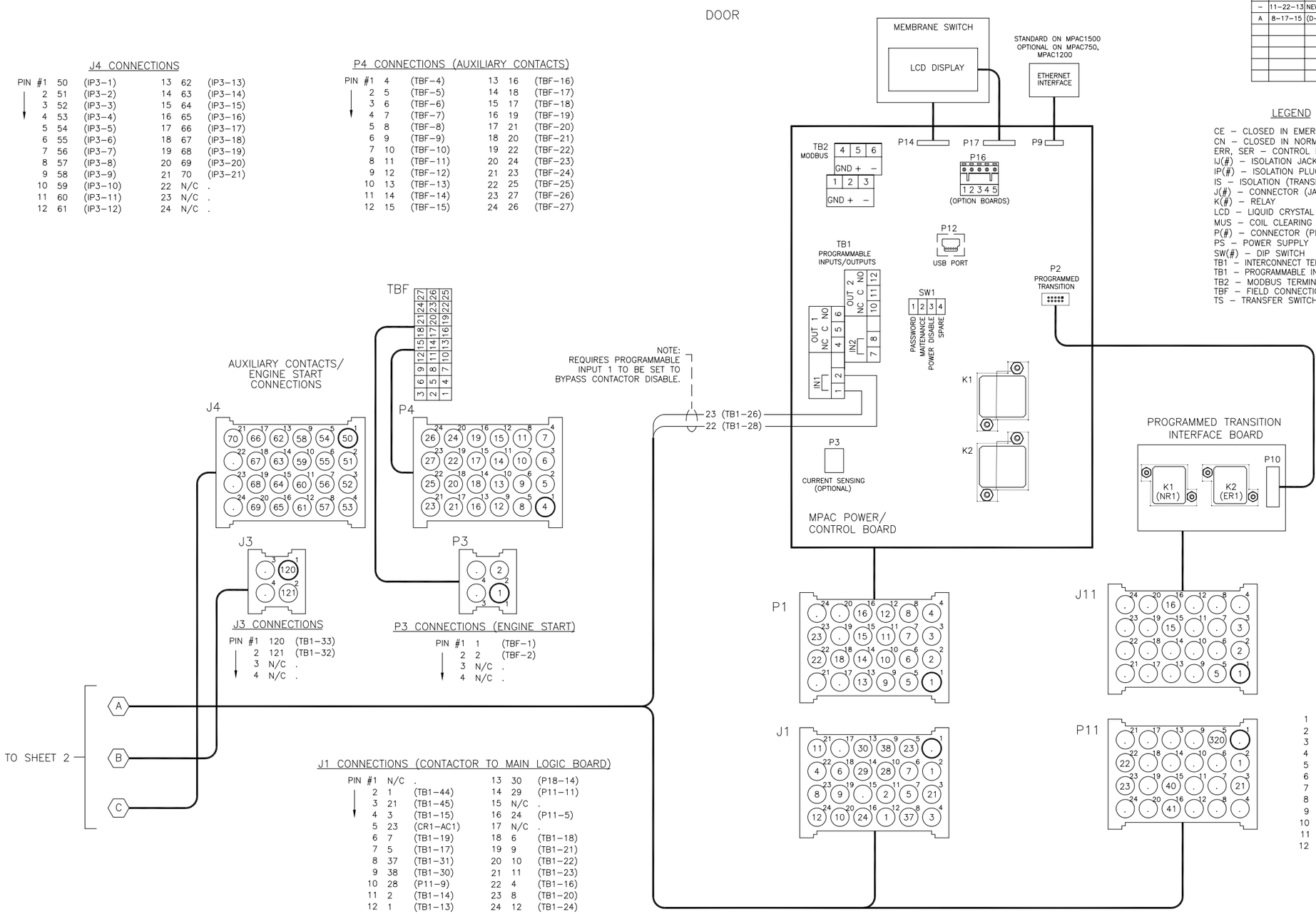

J4 CONNECTIONS

PIN #1	50	(IP3–1)	13	62	(IP3–13)
2	51	(IP3–2)	14	63	(IP3–14)
3	52	(IP3–3)	15	64	(IP3–15)
4	53	(IP3–4)	16	65	(IP3–16)
5	54	(IP3–5)	17	66	(IP3–17)
6	55	(IP3–6)	18	67	(IP3–18)
7	56	(IP3–7)	19	68	(IP3–19)
8	57	(IP3–8)	20	69	(IP3–20)
9	58	(IP3–9)	21	70	(IP3–21)
10	59	(IP3–10)	22	N/C	.
11	60	(IP3–11)	23	N/C	.
12	61	(IP3–12)	24	N/C	.

P4 CONNECTIONS (AUXILIARY CONTACTS)

PIN #1	4	(TBF–4)	13	16	(TBF–16)
2	5	(TBF–5)	14	18	(TBF–17)
3	6	(TBF–6)	15	17	(TBF–18)
4	7	(TBF–7)	16	19	(TBF–19)
5	8	(TBF–8)	17	21	(TBF–20)
6	9	(TBF–9)	18	20	(TBF–21)
7	10	(TBF–10)	19	22	(TBF–22)
8	11	(TBF–11)	20	24	(TBF–23)
9	12	(TBF–12)	21	23	(TBF–24)
10	13	(TBF–13)	22	25	(TBF–25)
11	14	(TBF–14)	23	27	(TBF–26)
12	15	(TBF–15)	24	26	(TBF–27)

J3 CONNECTIONS

PIN #1	120	(TB1–33)
2	121	(TB1–32)
3	N/C	.
4	N/C	.

P3 CONNECTIONS (ENGINE START)

PIN #1	1	(TBF–1)
2	2	(TBF–2)
3	N/C	.
4	N/C	.

J1 CONNECTIONS (CONTACTOR TO MAIN LOGIC BOARD)

PIN #1	N/C	.	13	30	(P18–14)
2	1	(TB1–44)	14	29	(P11–11)
3	21	(TB1–45)	15	N/C	.
4	3	(TB1–15)	16	24	(P11–5)
5	23	(CR1–AC1)	17	N/C	.
6	7	(TB1–19)	18	6	(TB1–18)
7	5	(TB1–17)	19	9	(TB1–21)
8	37	(TB1–31)	20	10	(TB1–22)
9	38	(TB1–30)	21	11	(TB1–23)
10	28	(P11–9)	22	4	(TB1–16)
11	2	(TB1–14)	23	8	(TB1–20)
12	1	(TB1–13)	24	12	(TB1–24)

LEGEND

CE – CLOSED IN EMERGENCY
CN – CLOSED IN NORMAL
ERR, SER – CONTROL MODULE RELAY
IJ(#) – ISOLATION JACK ASSEMBLY
IP(#) – ISOLATION PLUG ASSEMBLY
IS – ISOLATION (TRANSFER SWITCH CARRIAGE POSITION)
J(#) – CONNECTOR (JACK)
K(#) – RELAY
LCD – LIQUID CRYSTAL DISPLAY
MUS – COIL CLEARING CONTACT
P(#) – CONNECTOR (PLUG)
PS – POWER SUPPLY
SW(#) – DIP SWITCH
TB1 – INTERCONNECT TERMINAL BLOCK (TRANSFER SWITCH)
TB1 – PROGRAMMABLE INPUT/OUTPUT TERMINAL BLOCK (MPAC)
TB2 – MODBUS TERMINAL BLOCK (MPAC)
TBF – FIELD CONNECTION TERMINAL BLOCK
TS – TRANSFER SWITCH

P11 CONNECTIONS

1	N/C	.	13	N/C	.
2	1	(P18–10)	14	N/C	.
3	21	(P18–12)	15	40	(P18–9)
4	N/C	.	16	41	(P18–13)
5	320	(P18–11)	17	N/C	.
6	N/C	.	18	N/C	.
7	N/C	.	19	N/C	.
8	N/C	.	20	N/C	.
9	N/C	.	21	N/C	.
10	N/C	.	22	22	(TB1–7)
11	N/C	.	23	23	(TB1–6)
12	N/C	.	24	N/C	.

MODEL KBP
1600–4000A
BYPASS MECHANISM
PROGRAMMED TRANSITION
FOR SCHEMATIC DIAGRAM SEE GM89685

UNLESS OTHERWISE SPECIFIED –
1) DIMENSIONS ARE IN INCHES
2) TOLERANCES ARE:
.XXX± .010 ANGLES ± 1/2°
.XX ± .030 SURFACE FINISH
.X ± .060 MAX.
FRACTIONS ±

APPROVALS		DATE
DRAWN	DFS	11–22–13
CHECKED	MTL	11–22–13
APPROVED	HCC	11–22–13

KOHLER CO.
POWER SYSTEMS, KOHLER, WI 53044 U.S.A.
THIS DRAWING, IN DESIGN AND DETAIL, IS KOHLER CO. PROPERTY AND MUST NOT BE USED EXCEPT IN CONNECTION WITH KOHLER CO. WORK.
ALL RIGHTS OF DESIGN OR INVENTION ARE RESERVED.

TITLE DIAGRAM, WIRING
SCALE / / / CAD NO. SHEET 1–2
PLOTTED DWG. NO. GM89686 D

REV	DATE	REVISION	BY	M F
–	11–22–13	NEW DRAWING [CT55093]	DFS	
A	8–17–15	SEE SHEET 1 [CT120983]	BTW	

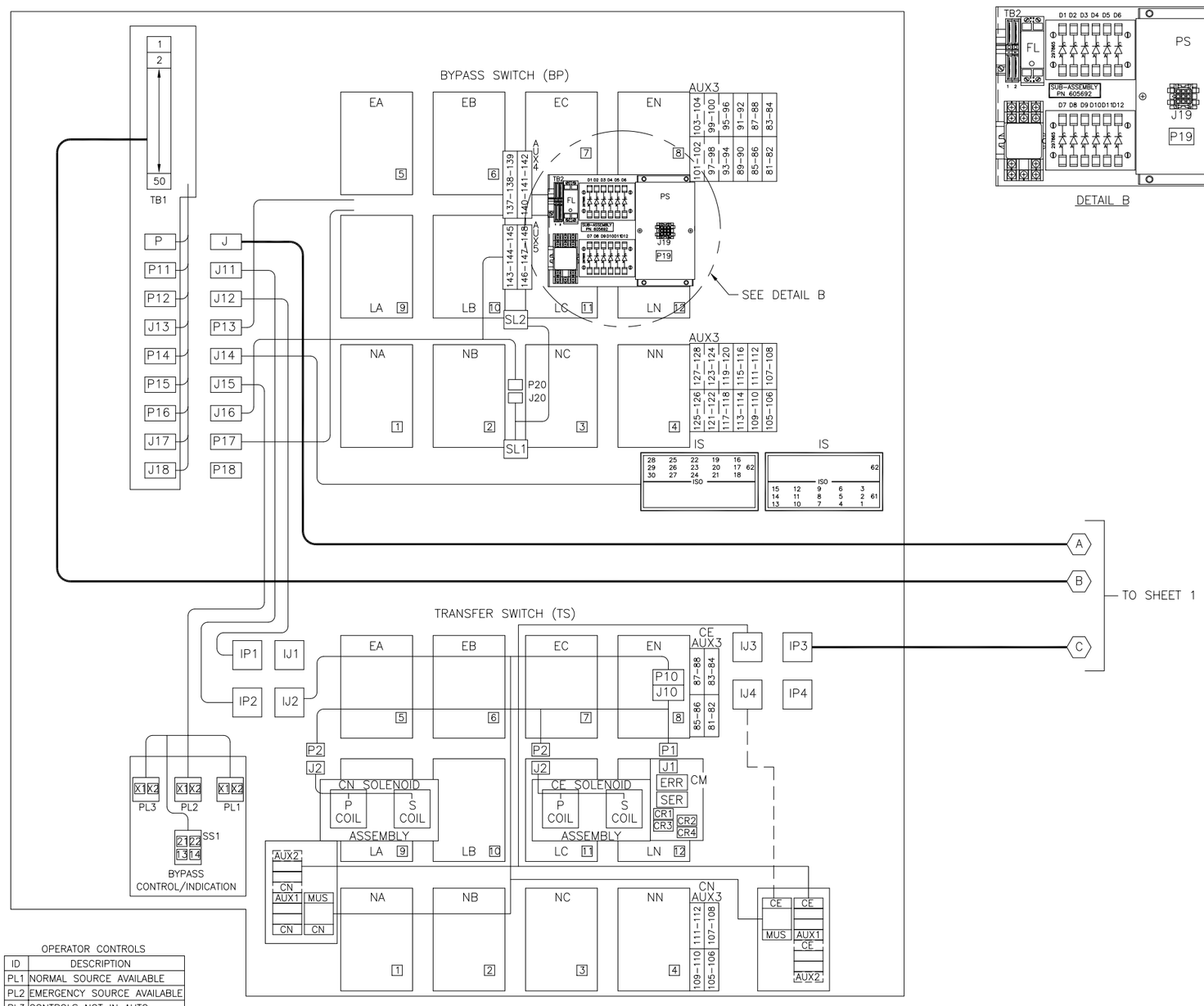

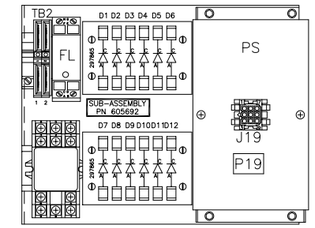

DETAIL B

OPERATOR CONTROLS

ID	DESCRIPTION
PL1	NORMAL SOURCE AVAILABLE
PL2	EMERGENCY SOURCE AVAILABLE
PL3	CONTROLS NOT IN AUTO
SS1	ENGINE START

MODEL KBP
1600–4000A
BYPASS MECHANISM
PROGRAMMED TRANSITION
FOR SCHEMATIC DIAGRAM SEE GM89685

UNLESS OTHERWISE SPECIFIED –
1) DIMENSIONS ARE IN INCHES
2) TOLERANCES ARE:
.XXX ± .010 ANGLES ± 1/2°
.XX ± .030 SURFACE FINISH
.X ± .060 √ MAX.
FRACTIONS ±

APPROVALS		DATE
DRAWN	DFS	11–22–13
CHECKED	MTL	11–22–13
APPROVED	HCC	11–22–13

KOHLER CO.
POWER SYSTEMS, KOHLER, WI 53044 U.S.A.
THIS DRAWING, IN DESIGN AND DETAIL, IS KOHLER CO. PROPERTY AND MUST NOT BE USED EXCEPT IN CONNECTION WITH KOHLER CO. WORK. ALL RIGHTS OF DESIGN OR INVENTION ARE RESERVED.

TITLE DIAGRAM, WIRING

SCALE / / / | CAD NO. | SHEET 2–2
PLOTTED | DWG. NO. GM89686 | D

REV	DATE	REVISION	BY	M F
–	11–14–13	NEW DRAWING [CT55093]	DFS	
A	8–17–15	(D–8) TB2 MODBUS CONNECTION VIEW UPDATED; [CT120983]	BTW	

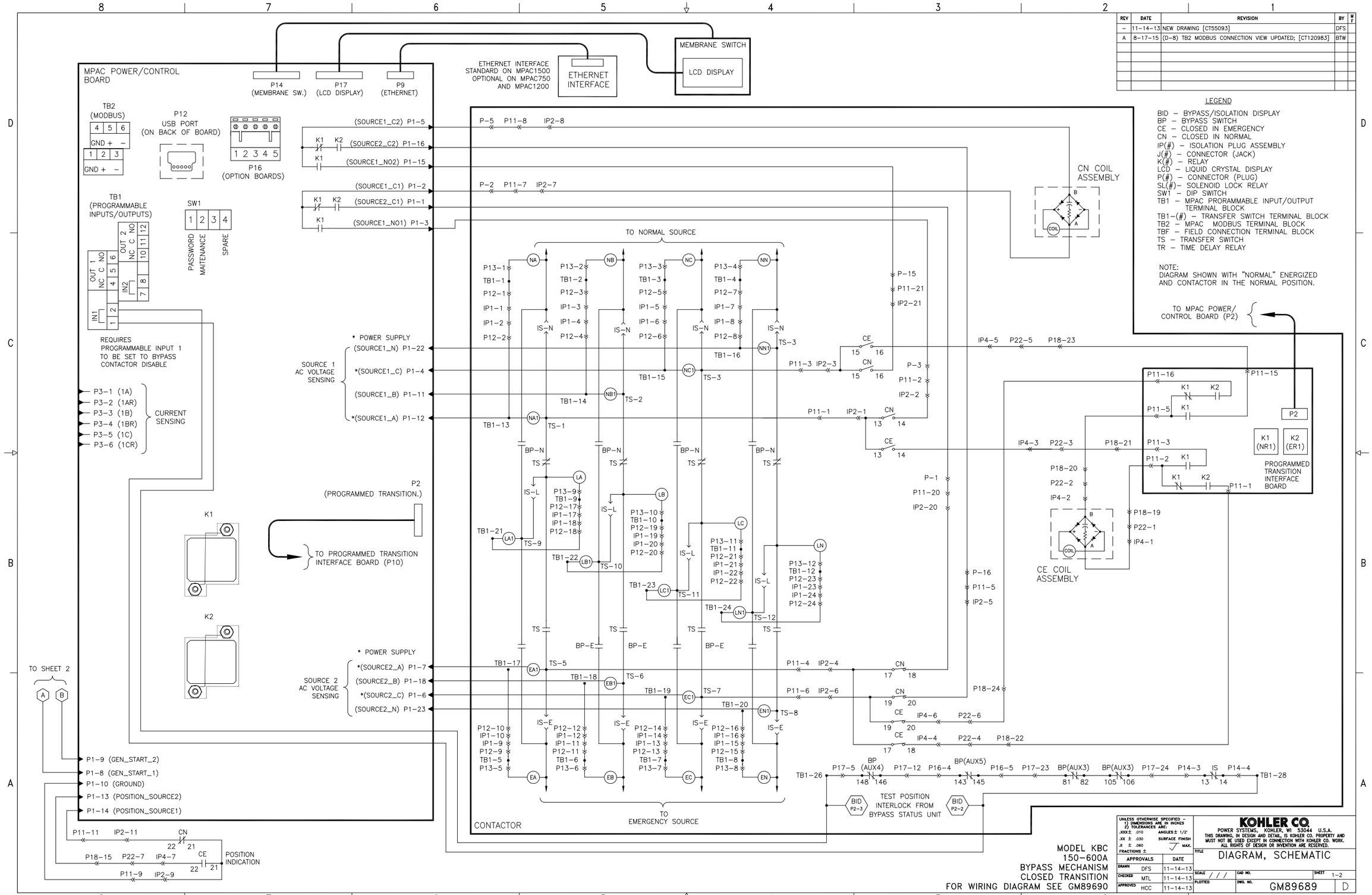

LEGEND

BID – BYPASS/ISOLATION DISPLAY
BP – BYPASS SWITCH
CE – CLOSED IN EMERGENCY
CN – CLOSED IN NORMAL
IP(#) – ISOLATION PLUG ASSEMBLY
J(#) – CONNECTOR (JACK)
K(#) – RELAY
LCD – LIQUID CRYSTAL DISPLAY
P(#) – CONNECTOR (PLUG)
SL(#)– SOLENOID LOCK RELAY
SW1 – DIP SWITCH
TB1 – MPAC PRORAMMABLE INPUT/OUTPUT TERMINAL BLOCK
TB1–(#) – TRANSFER SWITCH TERMINAL BLOCK
TB2 – MPAC MODBUS TERMINAL BLOCK
TBF – FIELD CONNECTION TERMINAL BLOCK
TS – TRANSFER SWITCH
TR – TIME DELAY RELAY

NOTE:
DIAGRAM SHOWN WITH "NORMAL" ENERGIZED AND CONTACTOR IN THE NORMAL POSITION.

MODEL KBC
150–600A
BYPASS MECHANISM
CLOSED TRANSITION
FOR WIRING DIAGRAM SEE GM89690

UNLESS OTHERWISE SPECIFIED – 1) DIMENSIONS ARE IN INCHES 2) TOLERANCES ARE:
.XXX± .010 ANGLES ± 1/2°
.XX ± .030 SURFACE FINISH
.X ± .060 MAX.
FRACTIONS ±

APPROVALS		DATE
DRAWN	DFS	11–14–13
CHECKED	MTL	11–14–13
APPROVED	HCC	11–14–13

KOHLER CO.
POWER SYSTEMS, KOHLER, WI 53044 U.S.A.
THIS DRAWING, IN DESIGN AND DETAIL, IS KOHLER CO. PROPERTY AND MUST NOT BE USED EXCEPT IN CONNECTION WITH KOHLER CO. WORK. ALL RIGHTS OF DESIGN OR INVENTION ARE RESERVED.

TITLE DIAGRAM, SCHEMATIC

SCALE / / / | CAD NO. | SHEET 1–2
PLOTTED | DWG. NO. GM89689 | D

REV	DATE	REVISION	BY	M F
–	11–14–13	NEW DRAWING [CT55093]	DFS	
A	8–17–15	SEE SHEET 1 [CT120983]	BTW	

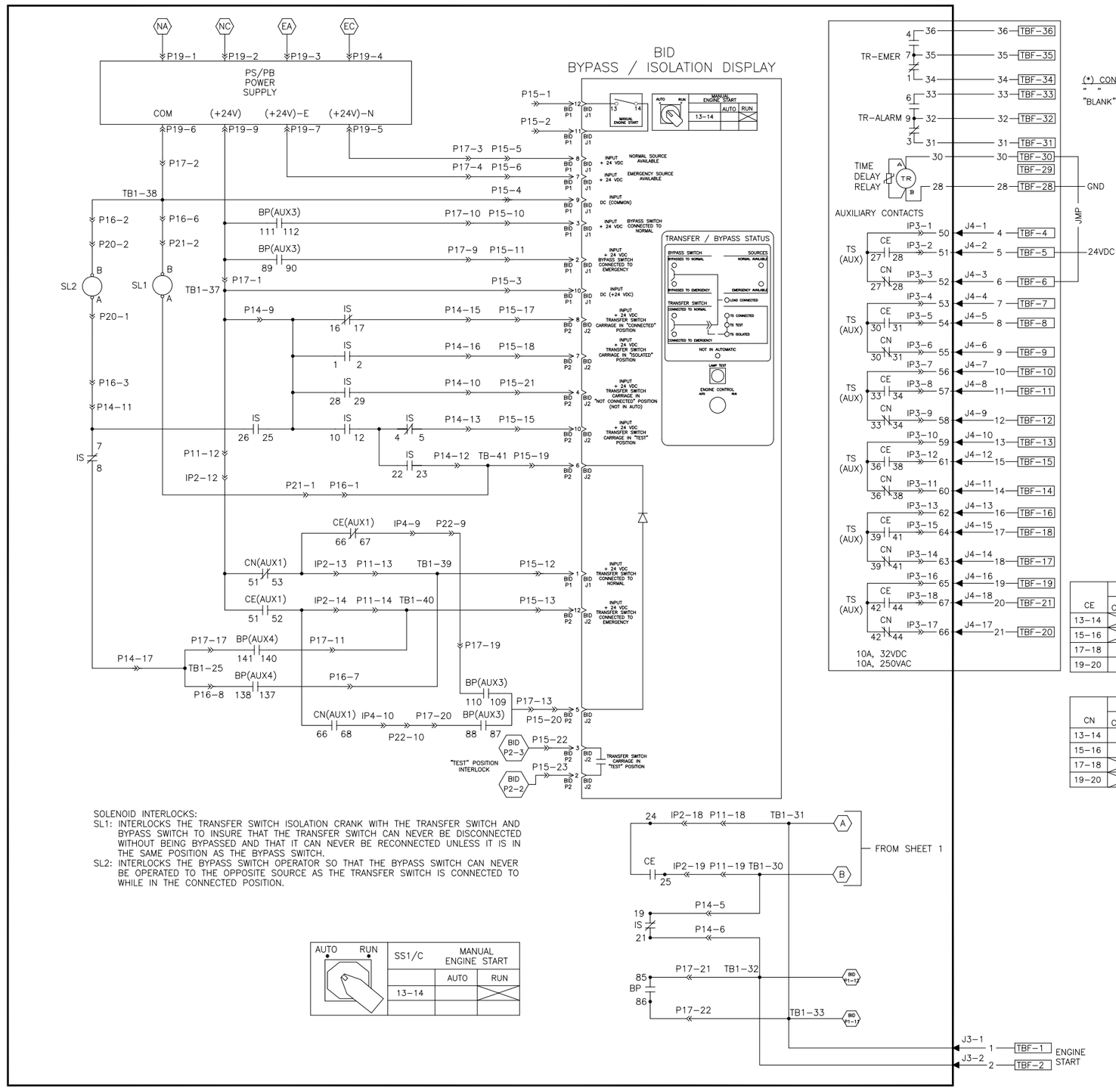

(*) CONTACT AVAILABILITY STATUS:
" " CONTACT PROVIDED & USED IN CIRCUITRY
"BLANK" CONTACT NOT USED IN PRESENT CIRCUITRY AVAILABLE.

BYPASS SWITCH AUXILIARY CONTACTS

BP AUXILIARY CONTACT	STATUS (*)	BP SWITCH POSITION (AUX3) EMERG	OFF	NORMAL
81–82	●			
83–84				
85–86	●			
87–88	●			
89–90	●			
91–92				
93–94				
101–102				
103–104				
105–106	●			
107–108				
109–110	●			
111–112	●			
113–114				
115–116				
117–118				
125–126				
127–128				

BYPASS SWITCH OPERATOR AUXILIARY CONTACTS

	BP AUXILIARY CONTACT	STATUS (*)	BP SWITCH HANDLE POSITION NORMAL (CCW) BYPASS (±90°)	NORMAL (CCW) <> ±20°	OFF	EMERGENCY (CW) <> ±20°	EMERGENCY (CW) BYPASS (±90°)
(AUX4)	140–141	●					
	140–142	●					
	146–147	●					
	146–148	●					
(AUX5)	137–138	●					
	137–139	●					
	143–144	●					
	143–145	●					

CE CONTACTS

CE	SOLENOID POSITION CE CLOSED	>	TDC *	<	CE OPEN
13–14					
15–16					
17–18					
19–20					

CN CONTACTS

CN	SOLENOID POSITION CN CLOSED	>	TDC *	<	CN OPEN
13–14					
15–16					
17–18					
19–20					

TDC – TOP DEAD CENTER POSITION.

ISOLATION (TRANSFER SWITCH CARRIAGE POSITION) AUXILIARY CONTACTS

IS AUXILIARY CONTACT	STATUS (*)	TRANSFER SWITCH CARRIAGE POSITION CONNECT	> <	TEST	> <	ISOLATE
1–2	●					
1–3	●					
4–5	●					
4–6	●					
7–8	●					
7–9	●					
10–11	●					
10–12	●					
13–14	●					
13–15	●					
16–17	●					
16–18	●					
19–20	●					
19–21	●					
22–23	●					
22–24	●					
25–26	●					
25–27	●					
28–29	●					
28–30	●					

SOLENOID INTERLOCKS:
SL1: INTERLOCKS THE TRANSFER SWITCH ISOLATION CRANK WITH THE TRANSFER SWITCH AND BYPASS SWITCH TO INSURE THAT THE TRANSFER SWITCH CAN NEVER BE DISCONNECTED WITHOUT BEING BYPASSED AND THAT IT CAN NEVER BE RECONNECTED UNLESS IT IS IN THE SAME POSITION AS THE BYPASS SWITCH.
SL2: INTERLOCKS THE BYPASS SWITCH OPERATOR SO THAT THE BYPASS SWITCH CAN NEVER BE OPERATED TO THE OPPOSITE SOURCE AS THE TRANSFER SWITCH IS CONNECTED TO WHILE IN THE CONNECTED POSITION.

SS1/C	MANUAL ENGINE START AUTO	RUN
13–14		☒

MODEL KBC
150–600A
BYPASS MECHANISM
CLOSED TRANSITION
FOR WIRING DIAGRAM SEE GM89690

UNLESS OTHERWISE SPECIFIED – 1) DIMENSIONS ARE IN INCHES 2) TOLERANCES ARE: .XXX ± .010 ANGLES ± 1/2° .XX ± .030 SURFACE FINISH .X ± .060 ✓ MAX. FRACTIONS ±

APPROVALS		DATE
DRAWN	DFS	11–14–13
CHECKED	MTL	11–14–13
APPROVED	HCC	11–14–13

KOHLER CO.
POWER SYSTEMS, KOHLER, WI 53044 U.S.A.
THIS DRAWING, IN DESIGN AND DETAIL, IS KOHLER CO. PROPERTY AND MUST NOT BE USED EXCEPT IN CONNECTION WITH KOHLER CO. WORK. ALL RIGHTS OF DESIGN OR INVENTION ARE RESERVED.

TITLE DIAGRAM, SCHEMATIC
SCALE / / / CAD NO. SHEET 2–2
PLOTTED DWG. NO. GM89689 D

REV	DATE	REVISION	BY	M F
–	11–22–13	NEW DRAWING [CT55093]	DFS	
A	8–17–15	(D–3) TB2 MODBUS CONNECTION VIEW UPDATED; [CT120983]	BTW	

RIGHT SIDE WALL

J4 CONNECTIONS

PIN #1	50	(CN–27)	13	62	(CN–39)
2	51	(CE–28)	14	63	(CN–40)
3	52	(CN–29)	15	64	(CE–41)
4	53	(CN–30)	16	65	(CN–42)
5	54	(CE–31)	17	66	(CN–43)
6	55	(CN–32)	18	67	(CE–44)
7	56	(CN–33)	19	68	(CN–45)
8	57	(CE–34)	20	69	(CN–46)
9	58 (CN–35)		21	70	(CE–47)
10	59	(CN–36)	22	71	(CN–48)
11	60	(CN–37)	23	72	(CN–49)
12	61	(CE–38)	24	73	(CE–50)

AUXILIARY CONTACTS/ ENGINE START CONNECTIONS

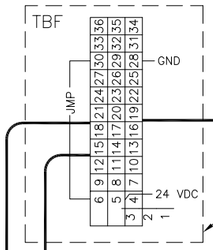

TIME DELAY RELAY

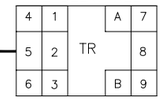

TBF CONNECTIONS

TERMINAL #1	8	(J3–1)	13	13	(J4–10)	25	25	(J4–22)
2	9	(J3–2)	14	14	(J4–11)	26	27	(J4–23)
3	.	NC	15	15	(J4–12)	27	26	(J4–24)
4	4	(J4–1)	16	16	(J4–13)	28	28	(TR–B)
5	5	(J4–2)	17	18	(J4–14)	29	.	NC
6	6	(J4–3)	18	17	(J4–15)	30	30	(TR–A)
7	7	(J4–4)	19	19	(J4–16)	31	31	(TR–3)
8	8	(J4–5)	20	21	(J4–17)	32	32	(TR–9)
9	9	(J4–6)	21	20	(J4–18)	33	33	(TR–6)
10	10	(J4–7)	22	22	(J4–19)	34	34	(TR–1)
11	11	(J4–8)	23	24	(J4–20)	35	35	(TR–7)
12	12	(J4–9)	24	23	(J4–21)	36	36	(TR–4)

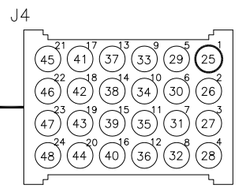

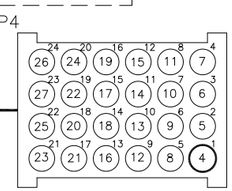

P4 CONNECTIONS (AUXILIARY CONTACTS)

PIN #1	4	(TBF–4)	13	16	(TBF–16)
2	5	(TBF–5)	14	18	(TBF–17)
3	6	(TBF–6)	15	17	(TBF–18)
4	7	(TBF–7)	16	19	(TBF–19)
5	8	(TBF–8)	17	21	(TBF–20)
6	9	(TBF–9)	18	20	(TBF–21)
7	10	(TBF–10)	19	22	(TBF–22)
8	11	(TBF–11)	20	24	(TBF–23)
9	12	(TBF–12)	21	23	(TBF–24)
10	13	(TBF–13)	22	25	(TBF–25)
11	14	(TBF–14)	23	27	(TBF–26)
12	15	(TBF–15)	24	26	(TBF–27)

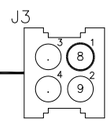

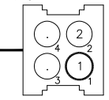

P3 CONNECTIONS (ENGINE START)

PIN #1	1	(TBF–1)
2	2	(TBF–2)
3	N/C	.
4	N/C	.

J3 CONNECTIONS

PIN #1	8	(CE–24)
2	9	(CE–25)
3	N/C	.
4	N/C	.

DETAIL A:

TBF CUSTOMER CONNECTIONS

TERMINAL #36	(TR–EMER NO)	35	(TR–EMER C)	34	(TR–EMER NC)
33	(TR–ALARM NO)	32	(TR–ALARM C)	31	(TR–ALARM NC)
30	NC	29	NC	28	(GND)
27	(CE NO)	26	(CN NO)	25	(CE–CN C)
24	(CE NO)	23	(CN NO)	22	(CE–CN C)
21	(CE NO)	20	(CN NO)	19	(CE–CN C)
18	(CE NO)	17	(CN NO)	16	(CE–CN C)
15	(CE NO)	14	(CN NO)	13	(CE–CN C)
12	(CN NO)	11	(CE NO)	10	(CE–CN C)
9	(CN NO)	8	(CE NO)	7	(CE–CN C)
6	NC	5	(24 VDC)	4	NC
3	NC	2	(ENG START)	1	(ENG START)

J1 CONNECTIONS (CONTACTOR TO MAIN LOGIC BOARD)

1	1	(CN–14)	*13	119	(CE–22)
2	2	(CN–A)	14	14	(CN–22)
3	3	(CN–18)	15	15	(CN–20)
4	4	(TB1–15)	16	16	(CN–16)
5	5	(CN–B)	17	N/C	.
6	6	(TB1–19)	18	18	(TB1–18)
7	7	(TB1–17)	19	N/C	.
8	8	(CE–24)	20	N/C	.
9	9	(CE–25)	21	N/C	.
10	10	(CN–66)	22	22	(TB1–16)
11	11	(TS–2)	23	23	(TB1–20)
12	12	(TS–1)	24	N/C	.

* J1–13 & P11–13 CONNECTIONS SHOWN MODIFIED FROM ORIGINAL CONTACTOR.

P11 CONNECTIONS

1	107	(CE–18)	9	N/C	.	17	N/C	.
2	108	(CE–A)	10	N/C	.	18	N/C	.
3	109	(CE–14)	11	N/C	.	19	N/C	.
4	N/C	.	12	N/C	.	20	N/C	.
5	111	(CE–B)	*13	13	(CN–67)	21	N/C	.
6	N/C	.	14	120	(CE–67)	22	N/C	.
7	N/C	.	15	121	(CE–16)	23	N/C	.
8	N/C	.	16	122	(CE–20)	24	N/C	.

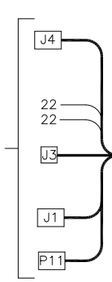

TO SHEET 2

DOOR

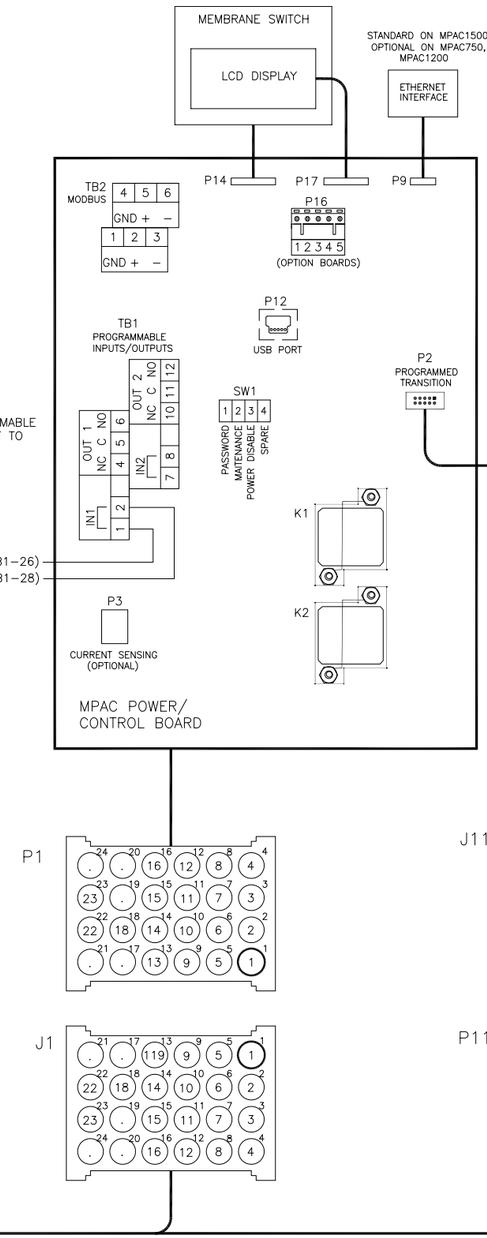

NOTE:
REQUIRES PROGRAMMABLE INPUT 1 TO BE SET TO BYPASS CONTACTOR DISABLE.

LEGEND

BID – BYPASS/ISOLATION DISPLAY
IJ(#) – ISOLATION JACK ASSEMBLY
IP(#) – ISOLATION PLUG ASSEMBLY
IS – ISOLATION (TRANSFER SWITCH CARRIAGE POSITION)
J(#) – CONNECTOR (JACK)
K(#) – RELAY
LCD – LIQUID CRYSTAL DISPLAY
P(#) – CONNECTOR (PLUG)
PS – POWER SUPPLY
SL(#) – SOLENOID LOCK RELAY
SW(#) – DIP SWITCH
TB1 – INTERCONNECT TERMINAL BLOCK (TRANSFER SWITCH)
TB1 – PROGRAMMABLE INPUT/OUTPUT TERMINAL BLOCK (MPAC)
TB2 – MODBUS TERMINAL BLOCK (MPAC)
TBF – FIELD CONNECTION TERMINAL BLOCK
TS – TRANSFER SWITCH

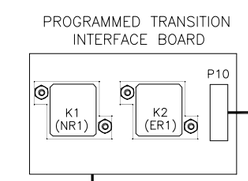

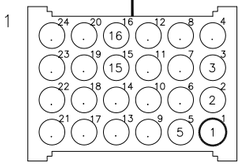

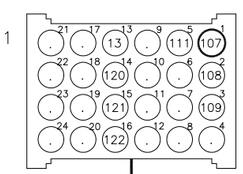

MODEL KBC
150–600A
BYPASS MECHANISM
CLOSED TRANSITION
FOR SCHEMATIC DIAGRAM SEE GM89689

UNLESS OTHERWISE SPECIFIED –
1) DIMENSIONS ARE IN INCHES
2) TOLERANCES ARE:
.XXX ± .010 ANGLES ± 1/2°
.XX ± .030 SURFACE FINISH
.X ± .060 MAX.
FRACTIONS ±

APPROVALS		DATE
DRAWN	DFS	11–22–13
CHECKED	MTL	11–22–13
APPROVED	HCC	11–22–13

KOHLER CO.
POWER SYSTEMS, KOHLER, WI 53044 U.S.A.
THIS DRAWING, IN DESIGN AND DETAIL, IS KOHLER CO. PROPERTY AND MUST NOT BE USED EXCEPT IN CONNECTION WITH KOHLER CO. WORK. ALL RIGHTS OF DESIGN OR INVENTION ARE RESERVED.

TITLE: DIAGRAM, WIRING
SCALE: / / /
CAD NO.
SHEET 1–2
PLOTTED
DWG. NO. GM89690 D

REV	DATE	REVISION	BY	M F
–	11–22–13	NEW DRAWING [CT55093]	DFS	
A	8–17–15	SEE SHEET 1 [CT120983]	BTW	

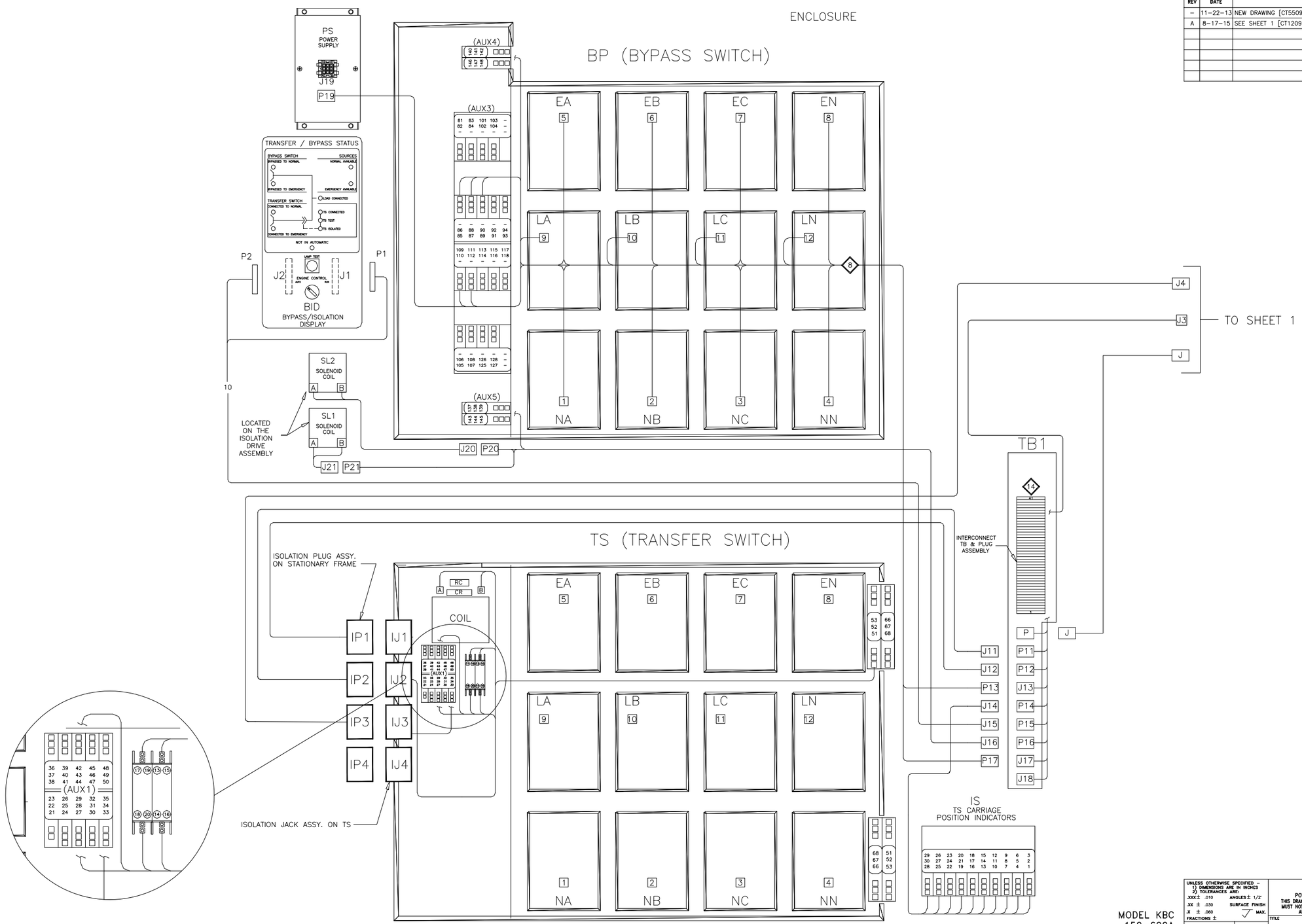

MODEL KBC
150–600A
BYPASS MECHANISM
CLOSED TRANSITION
FOR SCHEMATIC DIAGRAM SEE GM89689

UNLESS OTHERWISE SPECIFIED –
1) DIMENSIONS ARE IN INCHES
2) TOLERANCES ARE:
.XXX ± .010 ANGLES ± 1/2°
.XX ± .030 SURFACE FINISH
.X ± .060 MAX.
FRACTIONS ±

APPROVALS		DATE
DRAWN	DFS	11–22–13
CHECKED	MTL	11–22–13
APPROVED	HCC	11–22–13

KOHLER CO.
POWER SYSTEMS, KOHLER, WI 53044 U.S.A.
THIS DRAWING, IN DESIGN AND DETAIL, IS KOHLER CO. PROPERTY AND MUST NOT BE USED EXCEPT IN CONNECTION WITH KOHLER CO. WORK. ALL RIGHTS OF DESIGN OR INVENTION ARE RESERVED.

TITLE DIAGRAM, WIRING

SCALE / / / | CAD NO. | SHEET 2–2
PLOTTED | DWG. NO. GM89690 | D

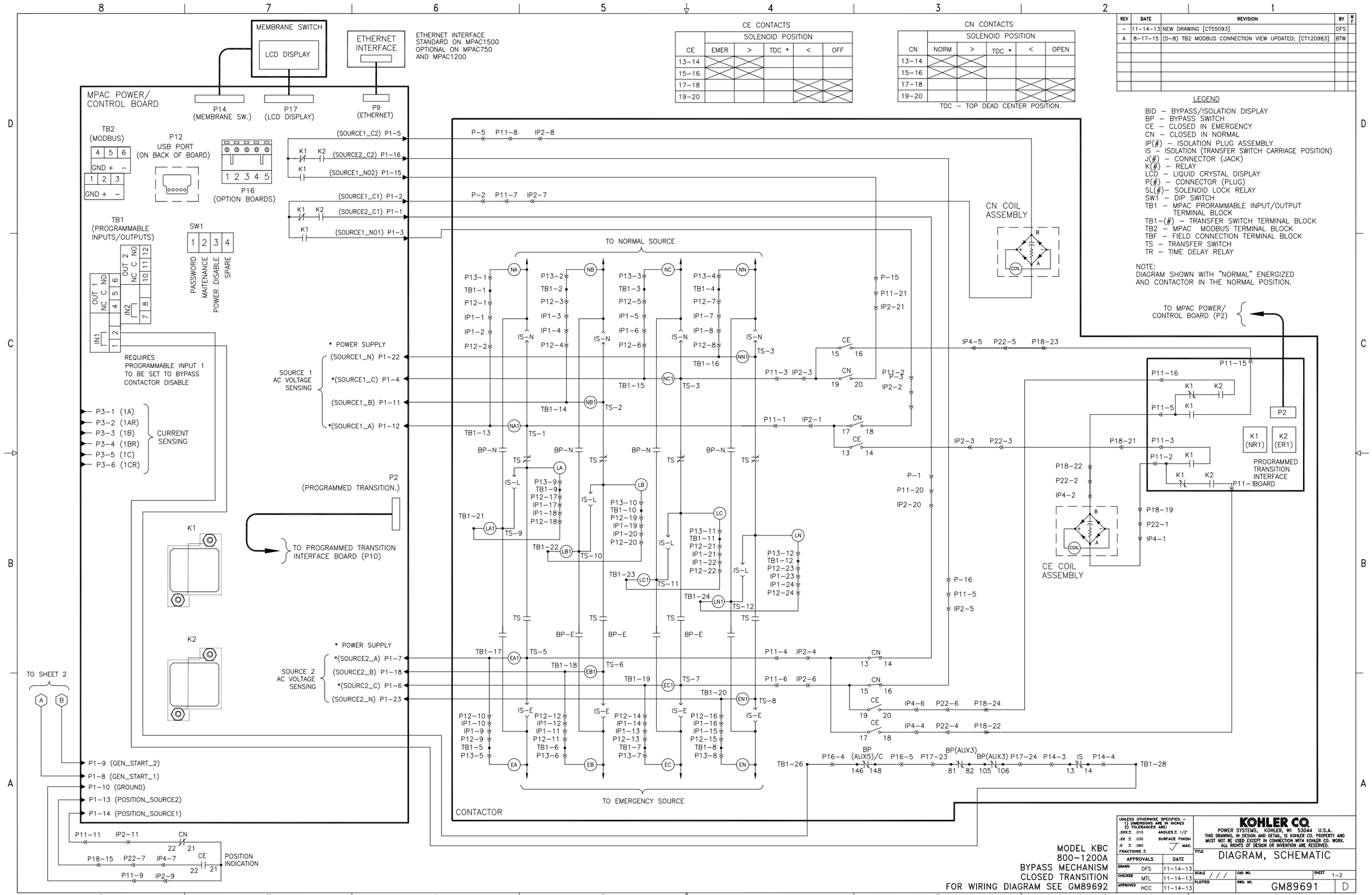

CE CONTACTS

CE	SOLENOID POSITION				
	EMER	>	TDC *	<	OFF
13–14	X	X			
15–16	X	X			
17–18				X	X
19–20				X	X

CN CONTACTS

CN	SOLENOID POSITION				
	NORM	>	TDC *	<	OPEN
13–14	X	X			
15–16	X	X			
17–18				X	X
19–20				X	X

TDC – TOP DEAD CENTER POSITION.

REV	DATE	REVISION	BY	M F
–	11–14–13	NEW DRAWING [CT55093]	DFS	
A	8–17–15	(D–8) TB2 MODBUS CONNECTION VIEW UPDATED; [CT120983]	BTW	

LEGEND

BID – BYPASS/ISOLATION DISPLAY
BP – BYPASS SWITCH
CE – CLOSED IN EMERGENCY
CN – CLOSED IN NORMAL
IP(#) – ISOLATION PLUG ASSEMBLY
IS – ISOLATION (TRANSFER SWITCH CARRIAGE POSITION)
J(#) – CONNECTOR (JACK)
K(#) – RELAY
LCD – LIQUID CRYSTAL DISPLAY
P(#) – CONNECTOR (PLUG)
SL(#)– SOLENOID LOCK RELAY
SW1 – DIP SWITCH
TB1 – MPAC PRORAMMABLE INPUT/OUTPUT TERMINAL BLOCK
TB1–(#) – TRANSFER SWITCH TERMINAL BLOCK
TB2 – MPAC MODBUS TERMINAL BLOCK
TBF – FIELD CONNECTION TERMINAL BLOCK
TS – TRANSFER SWITCH
TR – TIME DELAY RELAY

NOTE:
DIAGRAM SHOWN WITH "NORMAL" ENERGIZED AND CONTACTOR IN THE NORMAL POSITION.

MODEL KBC
800–1200A
BYPASS MECHANISM
CLOSED TRANSITION
FOR WIRING DIAGRAM SEE GM89692

UNLESS OTHERWISE SPECIFIED – 1) DIMENSIONS ARE IN INCHES 2) TOLERANCES ARE: .XXX± .010 .XX ± .030 .X ± .060 FRACTIONS ± ANGLES ± 1/2° SURFACE FINISH MAX.

APPROVALS		DATE
DRAWN	DFS	11–14–13
CHECKED	MTL	11–14–13
APPROVED	HCC	11–14–13

KOHLER CO.
POWER SYSTEMS, KOHLER, WI 53044 U.S.A.
THIS DRAWING, IN DESIGN AND DETAIL, IS KOHLER CO. PROPERTY AND MUST NOT BE USED EXCEPT IN CONNECTION WITH KOHLER CO. WORK. ALL RIGHTS OF DESIGN OR INVENTION ARE RESERVED.

TITLE DIAGRAM, SCHEMATIC
SCALE / / / CAD NO. SHEET 1–2
PLOTTED DWG. NO. GM89691 D

REV	DATE	REVISION	BY	M F
–	11–14–13	NEW DRAWING [CT55093]	DFS	
A	8–17–15	SEE SHEET 1 [CT120983]	BTW	

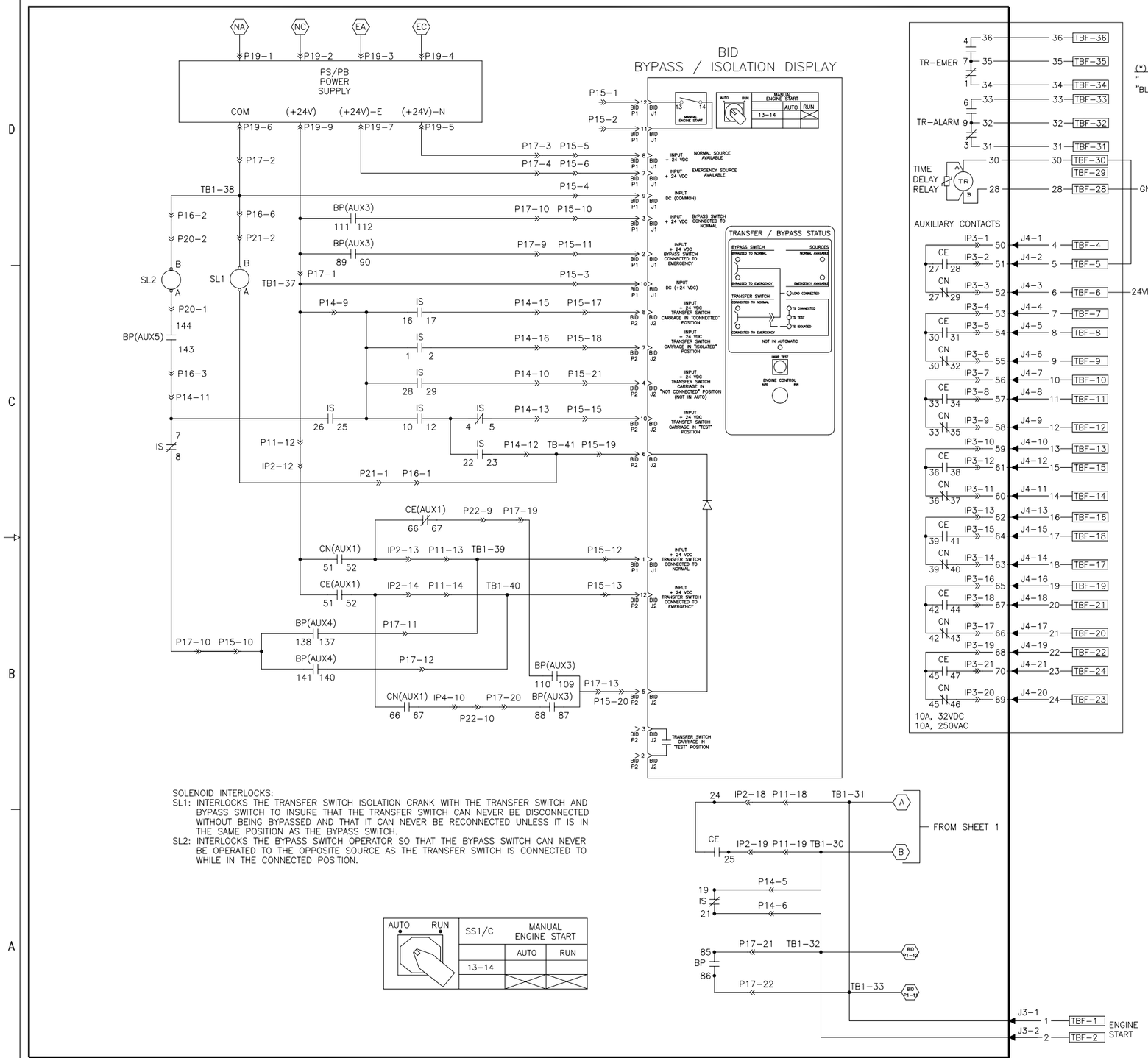

(*) CONTACT AVAILABILITY STATUS:
" " CONTACT PROVIDED & USED IN CIRCUITRY
"BLANK" CONTACT NOT USED. IF PHYSICALLY AVAILABLE. CONTACT IS FOR FACTORY USE ONLY

BYPASS SWITCH OPERATOR AUXILIARY CONTACTS

BP AUXILIARY CONTACT	STATUS (*)	BP SWITCH HANDLE POSITION (AUX4)		
		EMER (PULL)	<>	NORMAL (PUSH)
137–138	•			
137–139				
140–141	•			
140–142				

BYPASS SWITCH OPERATOR AUXILIARY CONTACTS

BP AUXILIARY CONTACT	STATUS (*)	BP SWITCH HANDLE POSITION (AUX5)		
		OFF (90°)	<> (75°)	BYPASS (–90°)
143–144	•			
143–145				
146–147				
146–148	•			

BYPASS SWITCH AUXILIARY CONTACTS

BP AUXILIARY CONTACT	STATUS (*)	BP SWITCH HANDLE POSITION (AUX3)		
		EMER	OFF	NORMAL
81–82				NONE
83–84				
85–86	•			
87–88	•			
89–90	•			
91–92				
93–94				
95–96				
97–98				
99–100				
101–102				
103–104				
105–106		NONE		
107–108				
109–110	•			
111–112	•			
113–114				
115–116				
117–118				
119–120				
121–122				
123–124				
125–126				
127–128				

ISOLATION (TRANSFER SWITCH CARRIAGE POSITION) AUXILIARY CONTACTS

IS AUXILIARY CONTACT	STATUS (*)	TRANSFER SWITCH CARRIAGE POSITION (AUX3)				
		CONNECT	> <	TEST	> <	ISOLATE
1–2	•					
4–5	•					
7–8	•					
10–12	•					
13–14	•					
13–15						
16–17	•					
16–18	•					
19–21	•					
22–23	•					
22–24	•					
25–26	•					
28–29	•					
61–62						

MODEL KBC
800–1200A
BYPASS MECHANISM
CLOSED TRANSITION
FOR WIRING DIAGRAM SEE GM89692

UNLESS OTHERWISE SPECIFIED – 1) DIMENSIONS ARE IN INCHES 2) TOLERANCES ARE: .XXX± .010 ANGLES ± 1/2° .XX ± .030 SURFACE FINISH .X ± .060 ✓ MAX. FRACTIONS ±

APPROVALS		DATE
DRAWN	DFS	11–14–13
CHECKED	MTL	11–14–13
APPROVED	HCC	11–14–13

KOHLER CO.
POWER SYSTEMS, KOHLER, WI 53044 U.S.A.
THIS DRAWING, IN DESIGN AND DETAIL, IS KOHLER CO. PROPERTY AND MUST NOT BE USED EXCEPT IN CONNECTION WITH KOHLER CO. WORK. ALL RIGHTS OF DESIGN OR INVENTION ARE RESERVED.

TITLE DIAGRAM, SCHEMATIC

SCALE / / / | CAD NO. | SHEET 2–2
PLOTTED | DWG. NO. GM89691 | D

REV	DATE	REVISION	BY	M F
–	11–22–13	NEW DRAWING [CT55093]	DFS	
A	8–17–15	(D–3) TB2 MODBUS CONNECTION VIEW UPDATED; [CT120983]	BTW	

RIGHT SIDE WALL

J4 CONNECTIONS

PIN #1	50	(CN–27)	13	62	(CN–39)
2	51	(CE–28)	14	63	(CN–40)
3	52	(CN–29)	15	64	(CE–41)
4	53	(CN–30)	16	65	(CN–42)
5	54	(CE–31)	17	66	(CN–43)
6	55	(CN–32)	18	67	(CE–44)
7	56	(CN–33)	19	68	(CN–45)
8	57	(CE–34)	20	69	(CN–46)
9	58	(CN–35)	21	70	(CE–47)
10	59	(CN–36)	22	71	(CN–48)
11	60	(CN–37)	23	72	(CN–49)
12	61	(CE–38)	24	73	(CN–50)

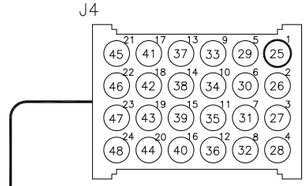

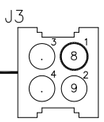

J3 CONNECTIONS

PIN #1	8	(CE–24)
2	9	(CE–25)
3	N/C	.
4	N/C	.

AUXILIARY CONTACTS/ ENGINE START CONNECTIONS

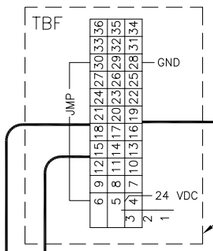

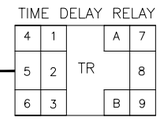

TBF CONNECTIONS

TERMINAL #1	8	(J3–1)	13	13	(J4–10)	25	25	(J4–22)
2	9	(J3–2)	14	14	(J4–11)	26	27	(J4–23)
3	.	NC	15	15	(J4–12)	27	26	(J4–24)
4	4	(J4–1)	16	16	(J4–13)	28	28	(TR–B)
5	5	(J4–2)	17	18	(J4–14)	29	.	NC
6	6	(J4–3)	18	17	(J4–15)	30	30	(TR–A)
7	7	(J4–4)	19	19	(J4–16)	31	31	(TR–3)
8	8	(J4–5)	20	21	(J4–17)	32	32	(TR–9)
9	9	(J4–6)	21	20	(J4–18)	33	33	(TR–6)
10	10	(J4–7)	22	22	(J4–19)	34	34	(TR–1)
11	11	(J4–8)	23	24	(J4–20)	35	35	(TR–7)
12	12	(J4–9)	24	23	(J4–21)	36	36	(TR–4)

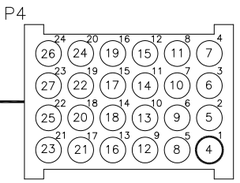

P4 CONNECTIONS (AUXILIARY CONTACTS)

PIN #1	4	(TBF–4)	13	16	(TBF–16)
2	5	(TBF–5)	14	18	(TBF–17)
3	6	(TBF–6)	15	17	(TBF–18)
4	7	(TBF–7)	16	19	(TBF–19)
5	8	(TBF–8)	17	21	(TBF–20)
6	9	(TBF–9)	18	20	(TBF–21)
7	10	(TBF–10)	19	22	(TBF–22)
8	11	(TBF–11)	20	24	(TBF–23)
9	12	(TBF–12)	21	23	(TBF–24)
10	13	(TBF–13)	22	25	(TBF–25)
11	14	(TBF–14)	23	27	(TBF–26)
12	15	(TBF–15)	24	26	(TBF–27)

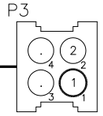

P3 CONNECTIONS (ENGINE START)

PIN #1	1	(TBF–1)
2	2	(TBF–2)
3	N/C	.
4	N/C	.

DETAIL A:

TBF CUSTOMER CONNECTIONS

TERMINAL #36	(TR–EMER NO)	35	(TR–EMER C)	34	(TR–EMER NC)
33	(TR–ALARM NO)	32	(TR–ALARM C)	31	(TR–ALARM NC)
30	NC	29	NC	28	(GND)
27	(CE NO)	26	(CN NO)	25	(CE–CN C)
24	(CE NO)	23	(CN NO)	22	(CE–CN C)
21	(CE NO)	20	(CN NO)	19	(CE–CN C)
18	(CE NO)	17	(CN NO)	16	(CE–CN C)
15	(CE NO)	14	(CN NO)	13	(CE–CN C)
12	(CN NO)	11	(CE NO)	10	(CE–CN C)
9	(CN NO)	8	(CE NO)	7	(CE–CN C)
6	NC	5	(24 VDC)	4	NC
3	NC	2	(ENG START)	1	(ENG START)

J1 CONNECTIONS (CONTACTOR TO MAIN LOGIC BOARD)

1	1	(CN–14)	*13	119	(CE–22)
2	2	(CN–A)	14	14	(CN–22)
3	3	(CN–18)	15	15	(CN–20)
4	4	(TB1–15)	16	16	(CN–16)
5	5	(CN–B)	17	N/C	.
6	6	(TB1–19)	18	18	(TB1–18)
7	7	(TB1–17)	19	N/C	.
8	8	(CE–24)	20	N/C	.
9	9	(CE–25)	21	N/C	.
10	10	(CN–66)	22	22	(TB1–16)
11	11	(TS–2)	23	23	(TB1–20)
12	12	(TS–1)	24	N/C	.

* J1–13 & P11–13 CONNECTIONS SHOWN MODIFIED FROM ORIGINAL CONTACTOR.

P11 CONNECTIONS

1	107	(CE–18)	9	N/C	.	17	N/C	.
2	108	(CE–A)	10	N/C	.	18	N/C	.
3	109	(CE–14)	11	N/C	.	19	N/C	.
4	N/C	.	12	N/C	.	20	N/C	.
5	111	(CE–B)	*13	13	(CN–67)	21	N/C	.
6	N/C	.	14	120	(CE–67)	22	N/C	.
7	N/C	.	15	121	(CE–16)	23	N/C	.
8	N/C	.	16	122	(CE–20)	24	N/C	.

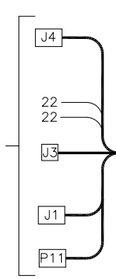

TO SHEET 2

DOOR

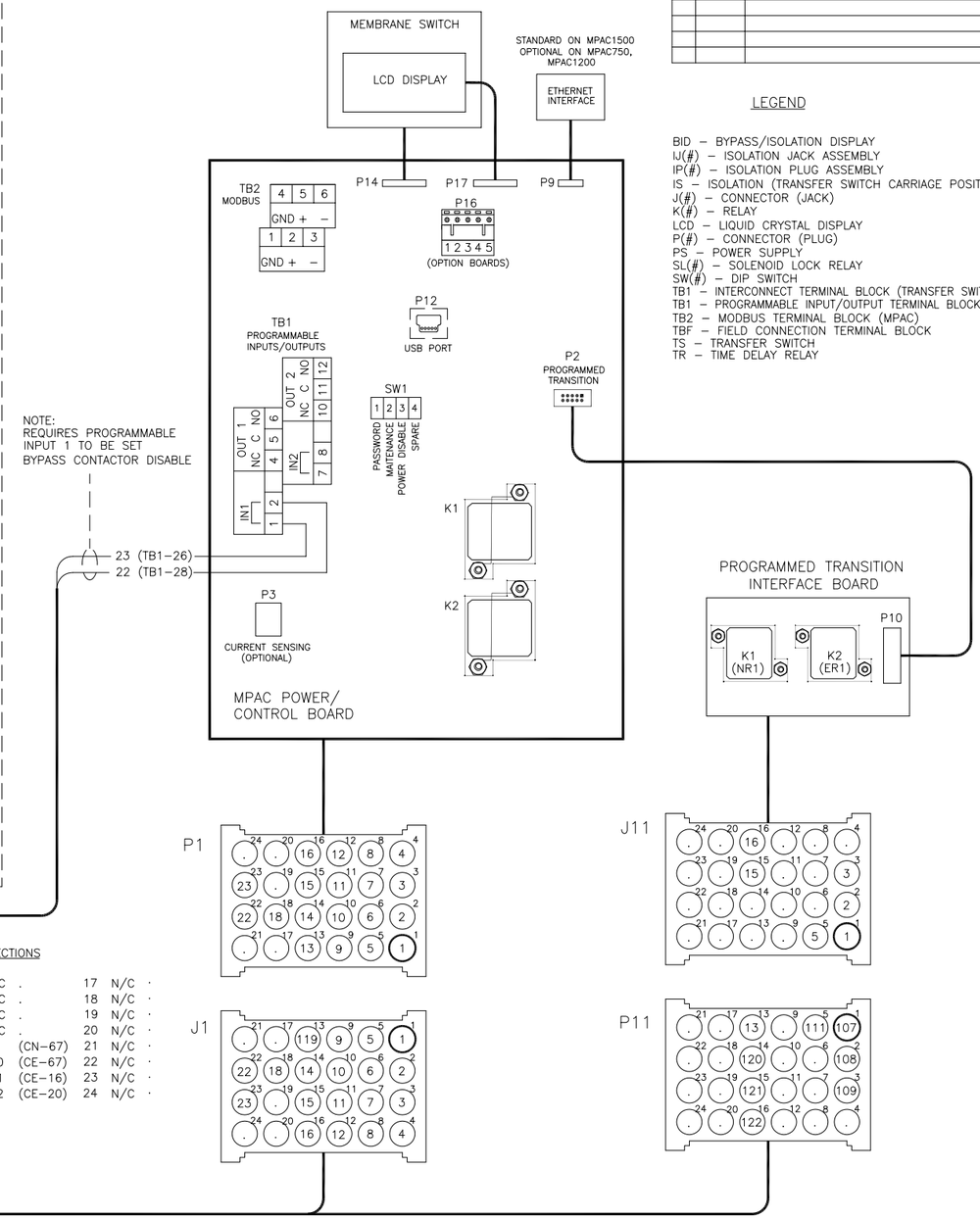

LEGEND

BID – BYPASS/ISOLATION DISPLAY
IJ(#) – ISOLATION JACK ASSEMBLY
IP(#) – ISOLATION PLUG ASSEMBLY
IS – ISOLATION (TRANSFER SWITCH CARRIAGE POSITION)
J(#) – CONNECTOR (JACK)
K(#) – RELAY
LCD – LIQUID CRYSTAL DISPLAY
P(#) – CONNECTOR (PLUG)
PS – POWER SUPPLY
SL(#) – SOLENOID LOCK RELAY
SW(#) – DIP SWITCH
TB1 – INTERCONNECT TERMINAL BLOCK (TRANSFER SWITCH)
TB1 – PROGRAMMABLE INPUT/OUTPUT TERMINAL BLOCK (MPAC)
TB2 – MODBUS TERMINAL BLOCK (MPAC)
TBF – FIELD CONNECTION TERMINAL BLOCK
TS – TRANSFER SWITCH
TR – TIME DELAY RELAY

MODEL KBC
800–1200A
BYPASS MECHANISM
CLOSED TRANSITION
FOR SCHEMATIC DIAGRAM SEE GM89691

UNLESS OTHERWISE SPECIFIED – 1) DIMENSIONS ARE IN INCHES 2) TOLERANCES ARE:
.XXX± .010 ANGLES± 1/2°
.XX ± .030 SURFACE FINISH
.X ± .060 √ MAX.
FRACTIONS ±

APPROVALS		DATE
DRAWN	DFS	11–22–13
CHECKED	MTL	11–22–13
APPROVED	HCC	11–22–13

KOHLER CO.
POWER SYSTEMS, KOHLER, WI 53044 U.S.A.
THIS DRAWING, IN DESIGN AND DETAIL, IS KOHLER CO. PROPERTY AND MUST NOT BE USED EXCEPT IN CONNECTION WITH KOHLER CO. WORK. ALL RIGHTS OF DESIGN OR INVENTION ARE RESERVED.

TITLE: DIAGRAM, WIRING

SCALE: / / / | CAD NO. | SHEET 1–2
PLOTTED | DWG. NO. GM89692 | D

REV	DATE	REVISION	BY	M F
–	11–22–13	NEW DRAWING [CT55093]	DFS	
A	8–17–15	SEE SHEET 1 [CT120983]	BTW	

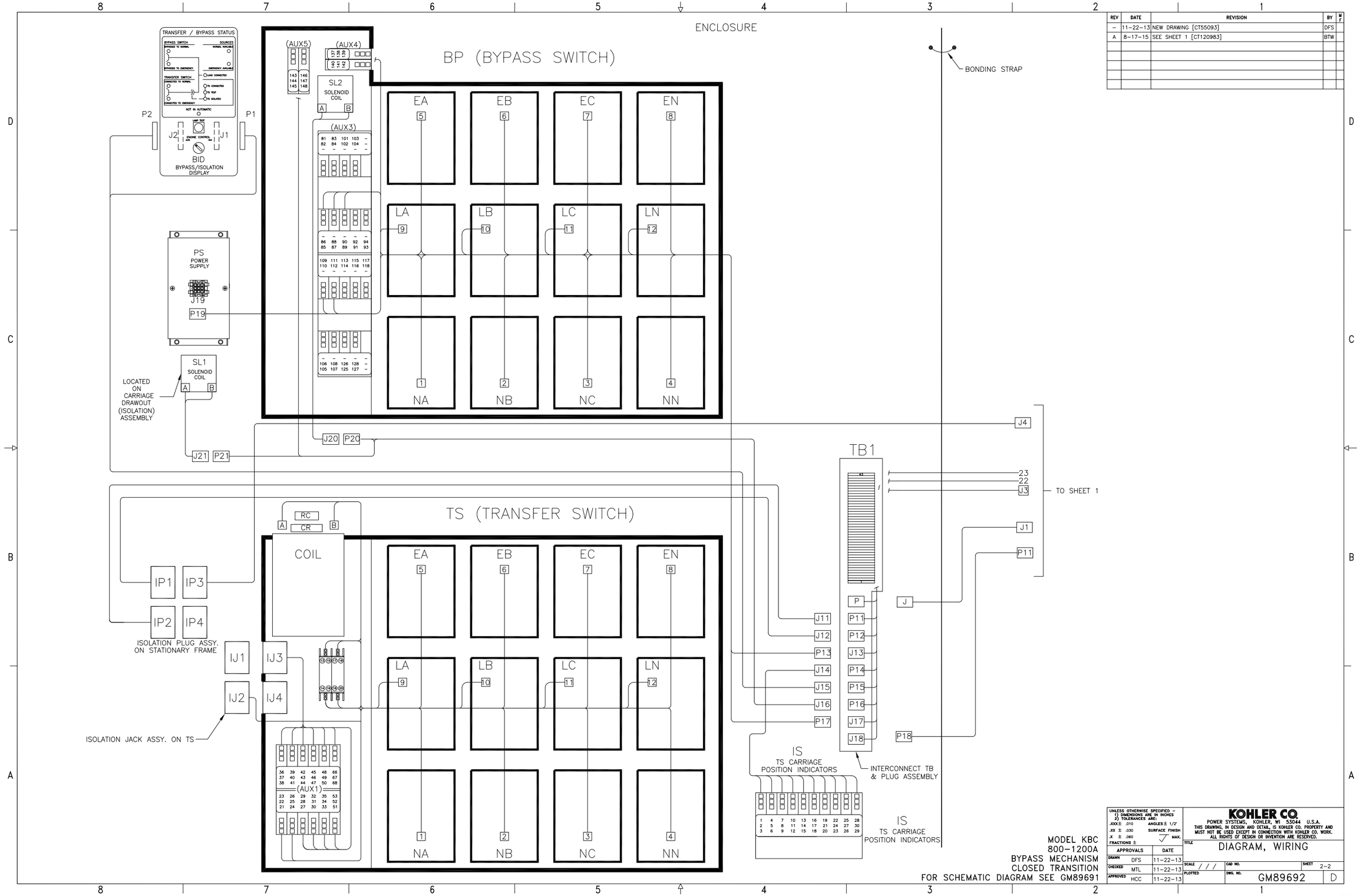

MODEL KBC
800–1200A
BYPASS MECHANISM
CLOSED TRANSITION
FOR SCHEMATIC DIAGRAM SEE GM89691

UNLESS OTHERWISE SPECIFIED –
1) DIMENSIONS ARE IN INCHES
2) TOLERANCES ARE:
.XXX ± .010 ANGLES ± 1/2°
.XX ± .030 SURFACE FINISH
.X ± .060 √ MAX.
FRACTIONS ±

APPROVALS		DATE
DRAWN	DFS	11–22–13
CHECKED	MTL	11–22–13
APPROVED	HCC	11–22–13

KOHLER CO.
POWER SYSTEMS, KOHLER, WI 53044 U.S.A.

THIS DRAWING, IN DESIGN AND DETAIL, IS KOHLER CO. PROPERTY AND MUST NOT BE USED EXCEPT IN CONNECTION WITH KOHLER CO. WORK. ALL RIGHTS OF DESIGN OR INVENTION ARE RESERVED.

TITLE: DIAGRAM, WIRING

SCALE / / / | CAD NO. | SHEET 2–2
PLOTTED | DWG. NO. GM89692 | D

REV	DATE	REVISION	BY	M F
–	11–19–13	NEW DRAWING [CT55093]	DFS	
A	5–1–14	(A–2,–3) BRIDGE RECTIFIERS (CR3 & CR4): MISSING LINE		
		ADDED BETWEEN RESISTOR & AC2 [CT79954]	DFS	
B	8–17–15	(D–8) TB2 MODBUS CONNECTION VIEW UPDATED; [CT120983]	BTW	

CN (MUS) CONTACTS

MUS	SOLENOID POSITION NORM	>	AFTER TDC *	<	OPEN
13–14		X	X		X
15–16				X	X
17–18	X	X			
19–20			X	X	

* AFTER SOLENOID PASSES THROUGH TOP DEAD CENTER POSITION.

CE (MUS) CONTACTS

MUS	SOLENOID POSITION OPEN	>	AFTER TDC *	<	EMER
13–14	X	X	X	X	
15–16					
17–18				X	X
19–20		X	X	X	

LEGEND

BP – BYPASS SWITCH
CE – CLOSED IN EMERGENCY
CN – CLOSED IN NORMAL
CR(#) – BRIDGE RECTIFIER
D(#) – DIODE
ERR – CONTROL MODULE RELAY
FL(#) – FLASHER
IP(#) – ISOLATION PLUG ASSEMBLY
IS – ISOLATION (TRANSFER SWITCH CARRIAGE POSITION)
J(#) – CONNECTOR (JACK)
K(#) – RELAY
LCD – LIQUID CRYSTAL DISPLAY
MUS – COIL CLEARING CONTACTS
P(#) – CONNECTOR (PLUG)
SER – CONTROL MODULE RELAY
SL(#)– SOLENOID LOCK RELAY
SW1 – DIP SWITCH
TB1 – MPAC PRORAMMABLE INPUT/OUTPUT TERMINAL BLOCK
TB1–(#) – TRANSFER SWITCH TERMINAL BLOCK
TB2 – MPAC MODBUS TERMINAL BLOCK
TBF – FIELD CONNECTION TERMINAL BLOCK
TS – TRANSFER SWITCH
TR – TIME DELAY RELAY

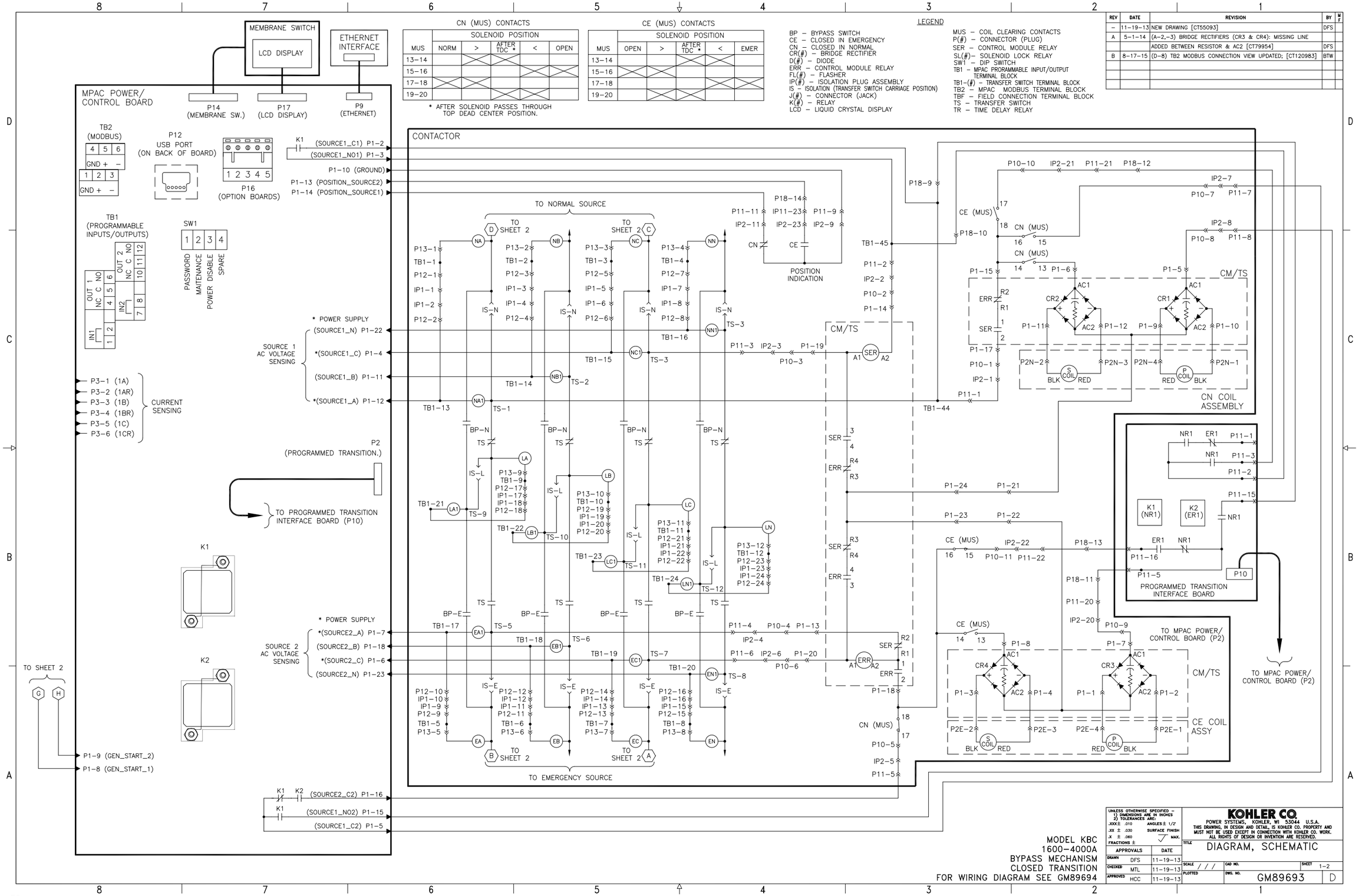

MODEL KBC
1600–4000A
BYPASS MECHANISM
CLOSED TRANSITION
FOR WIRING DIAGRAM SEE GM89694

UNLESS OTHERWISE SPECIFIED – 1) DIMENSIONS ARE IN INCHES 2) TOLERANCES ARE:
.XXX± .010 ANGLES ± 1/2°
.XX ± .030 SURFACE FINISH
.X ± .060 √ MAX.
FRACTIONS ±

APPROVALS		DATE
DRAWN	DFS	11–19–13
CHECKED	MTL	11–19–13
APPROVED	HCC	11–19–13

KOHLER CO.
POWER SYSTEMS, KOHLER, WI 53044 U.S.A.
THIS DRAWING, IN DESIGN AND DETAIL, IS KOHLER CO. PROPERTY AND MUST NOT BE USED EXCEPT IN CONNECTION WITH KOHLER CO. WORK. ALL RIGHTS OF DESIGN OR INVENTION ARE RESERVED.

TITLE DIAGRAM, SCHEMATIC

SCALE / / / | CAD NO. | SHEET 1–2
PLOTTED | DWG. NO. GM89693 | D

REV	DATE	REVISION	BY	M F
–	11–19–13	NEW DRAWING [CT55093]	DFS	
A	5–1–14	SEE SHEET 1 [CT79954]	DFS	
B	8–17–15	SEE SHEET 1 [CT120983]	BTW	

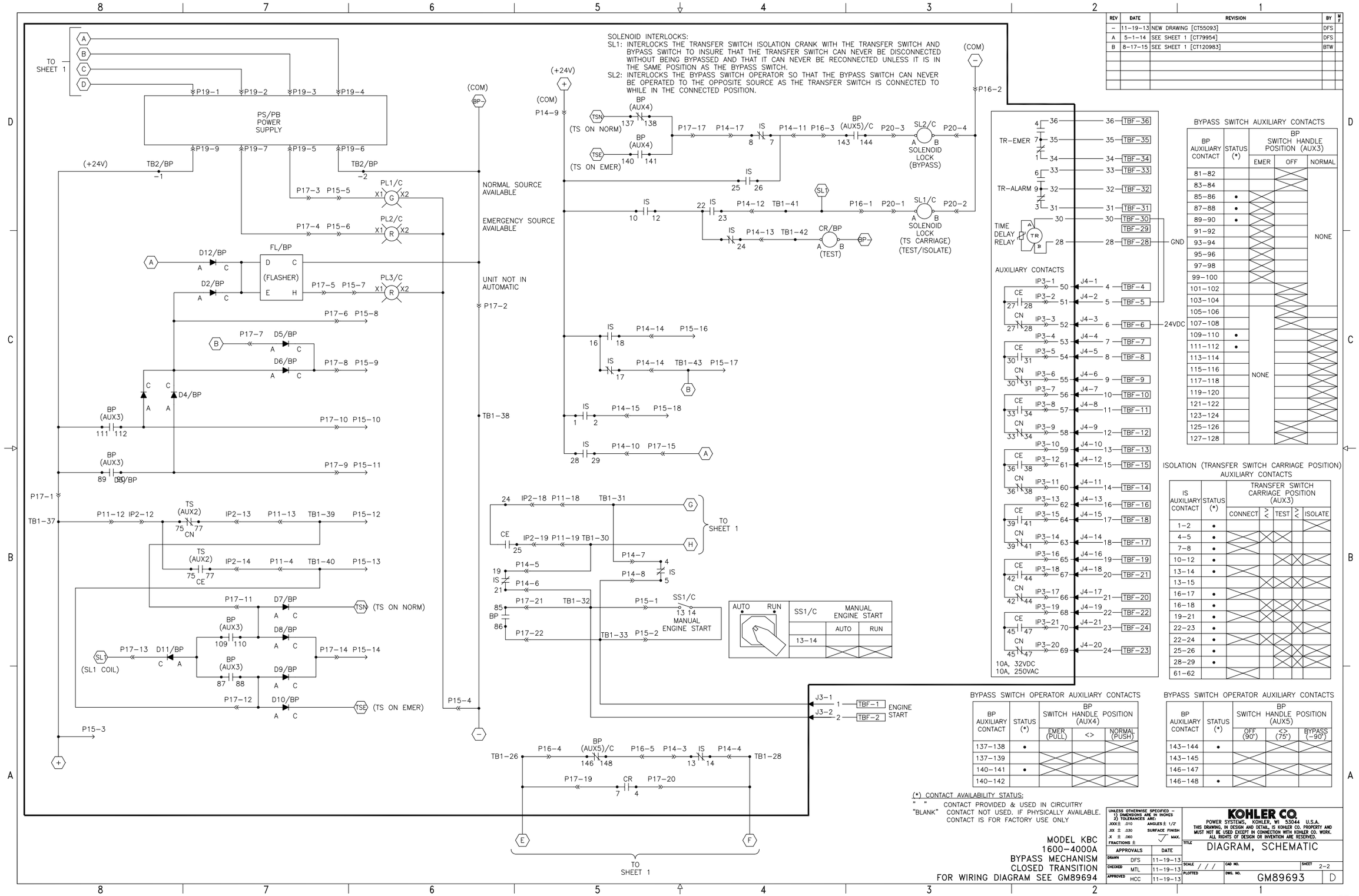

REV	DATE	REVISION	BY	M F
–	11–22–13	NEW DRAWING [CT55093]	DFS	
A	8–18–15	(D–3) TB2 MODBUS CONNECTION VIEW UPDATED; [CT120983]	BTW	

TBF CONNECTIONS

TERMINAL	#1							
	8	(J3–1)	13	13	(J4–10)	25	25	(J4–22)
	9	(J3–2)	14	14	(J4–11)	26	27	(J4–23)
	.	NC	15	15	(J4–12)	27	26	(J4–24)
	4	(J4–1)	16	16	(J4–13)	28	28	(TR–B)
	5	(J4–2)	17	18	(J4–14)	29	.	NC
	6	(J4–3)	18	17	(J4–15)	30	30	(TR–A)
	7	(J4–4)	19	19	(J4–16)	31	31	(TR–3)
	8	(J4–5)	20	21	(J4–17)	32	32	(TR–9)
	9	(J4–6)	21	20	(J4–18)	33	33	(TR–6)
	10	(J4–7)	22	22	(J4–19)	34	34	(TR–1)
	11	(J4–8)	23	24	(J4–20)	35	35	(TR–7)
	12	(J4–9)	24	23	(J4–21)	36	36	(TR–4)

DETAIL A: TBF CUSTOMER CONNECTIONS

TERMINAL	#36	(TR–EMER NO)	35	(TR–EMER C)	34	(TR–EMER NC)
	33	(TR–ALARM NO)	32	(TR–ALARM C)	31	(TR–ALARM NC)
	30	NC	29	NC	28	(GND)
	27	(CE NO)	26	(CN NO)	25	(CE–CN C)
	24	(CE NO)	23	(CN NO)	22	(CE–CN C)
	21	(CE NO)	20	(CN NO)	19	(CE–CN C)
	18	(CE NO)	17	(CN NO)	16	(CE–CN C)
	15	(CE NO)	14	(CN NO)	13	(CE–CN C)
	12	(CN NO)	11	(CE NO)	10	(CE–CN C)
	9	(CN NO)	8	(CE NO)	7	(CE–CN C)
	6	NC	5	(24 VDC)	4	NC
	3	NC	2	(ENG START)	1	(ENG START)

P4 CONNECTIONS (AUXILIARY CONTACTS)

PIN	#1					
	4	(TBF–4)	13	16	(TBF–16)
	5	(TBF–5)	14	18	(TBF–17)
	6	(TBF–6)	15	17	(TBF–18)
	7	(TBF–7)	16	19	(TBF–19)
	8	(TBF–8)	17	21	(TBF–20)
	9	(TBF–9)	18	20	(TBF–21)
	10	(TBF–10)	19	22	(TBF–22)
	11	(TBF–11)	20	24	(TBF–23)
	12	(TBF–12)	21	23	(TBF–24)
	13	(TBF–13)	22	25	(TBF–25)
	14	(TBF–14)	23	27	(TBF–26)
	15	(TBF–15)	24	26	(TBF–27)

J4 CONNECTIONS

PIN	#1				
	50	(IP3–1)	13	62	(IP3–13)
	51	(IP3–2)	14	63	(IP3–14)
	52	(IP3–3)	15	64	(IP3–15)
	53	(IP3–4)	16	65	(IP3–16)
	54	(IP3–5)	17	66	(IP3–17)
	55	(IP3–6)	18	67	(IP3–18)
	56	(IP3–7)	19	68	(IP3–19)
	57	(IP3–8)	20	69	(IP3–20)
	58	(IP3–9)	21	70	(IP3–21)
	59	(IP3–10)	22	N/C	.
	60	(IP3–11)	23	N/C	.
	61	(IP3–12)	24	N/C	

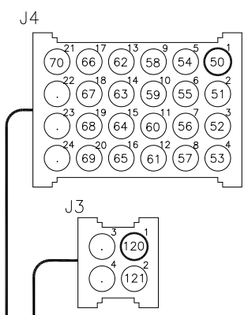

J3 CONNECTIONS

PIN	#1		
	120	(TB1–33)	
	121	(TB1–32)	
	N/C	.	
	N/C	.	

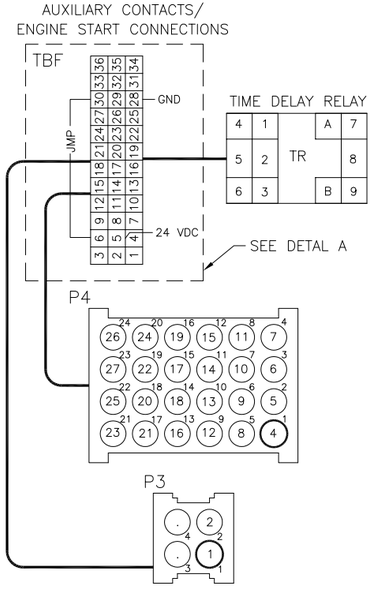

P3 CONNECTIONS (ENGINE START)

PIN	#1		
	1	(TBF–1)	
	2	(TBF–2)	
	N/C	.	
	N/C	.	

TO SHEET 2 — A, B, C

J1 CONNECTIONS (CONTACTOR TO MAIN LOGIC BOARD)

PIN	#1					
	N/C	.		13	30	(P18–14)
	1	(TB1–44)		14	29	(P11–11)
	21	(TB1–45)		15	N/C	.
	3	(TB1–15)		16	24	(P11–5)
	23	(CR1–AC1)		17	N/C	.
	7	(TB1–19)		18	6	(TB1–18)
	5	(TB1–17)		19	9	(TB1–21)
	37	(TB1–31)		20	10	(TB1–22)
	38	(TB1–30)		21	11	(TB1–23)
	28	(P11–9)		22	4	(TB1–16)
	2	(TB1–14)		23	8	(TB1–20)
	1	(TB1–13)		24	12	(TB1–24)

P11 CONNECTIONS

1	N/C	.	9	N/C	.	17	N/C	.
2	1	(P18–10)	10	N/C	.	18	N/C	.
3	21	(P18–12)	11	N/C	.	19	N/C	.
4	N/C	.	12	N/C	.	20	N/C	.
5	320	(P18–11)	13	N/C	.	21	N/C	.
6	N/C	.	14	N/C	.	22	22	(TB1–7)
7	N/C	.	15	40	(P18–9)	23	23	(TB1–6)
8	N/C	.	16	41	(P18–13)	24	N/C	.

NOTE:
REQUIRES PROGRAMMABLE INPUT 1 TO BE SET TO BYPASS CONTACTOR DISABLE.

23 (TB1–26)
22 (TB1–28)

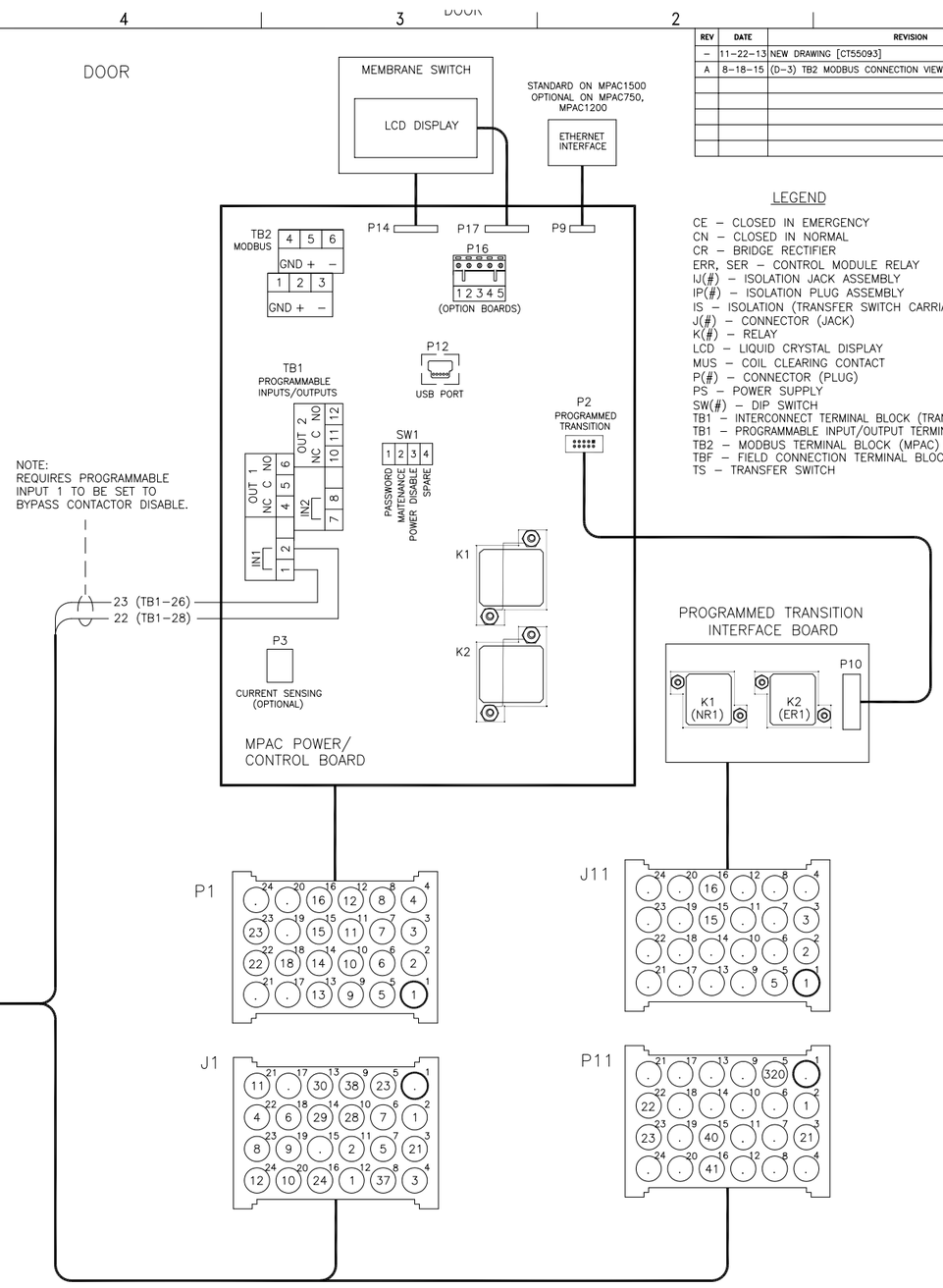

LEGEND

CE – CLOSED IN EMERGENCY
CN – CLOSED IN NORMAL
CR – BRIDGE RECTIFIER
ERR, SER – CONTROL MODULE RELAY
IJ(#) – ISOLATION JACK ASSEMBLY
IP(#) – ISOLATION PLUG ASSEMBLY
IS – ISOLATION (TRANSFER SWITCH CARRIAGE POSITION)
J(#) – CONNECTOR (JACK)
K(#) – RELAY
LCD – LIQUID CRYSTAL DISPLAY
MUS – COIL CLEARING CONTACT
P(#) – CONNECTOR (PLUG)
PS – POWER SUPPLY
SW(#) – DIP SWITCH
TB1 – INTERCONNECT TERMINAL BLOCK (TRANSFER SWITCH)
TB1 – PROGRAMMABLE INPUT/OUTPUT TERMINAL BLOCK (MPAC)
TB2 – MODBUS TERMINAL BLOCK (MPAC)
TBF – FIELD CONNECTION TERMINAL BLOCK
TS – TRANSFER SWITCH

MODEL KBC
1600–4000A
BYPASS MECHANISM
CLOSED TRANSITION
FOR SCHEMATIC DIAGRAM SEE GM89693

UNLESS OTHERWISE SPECIFIED –
1) DIMENSIONS ARE IN INCHES
2) TOLERANCES ARE:
.XXX ± .010 ANGLES ± 1/2°
.XX ± .030 SURFACE FINISH
.X ± .060 √ MAX.
FRACTIONS ±

APPROVALS		DATE
DRAWN	DFS	11–22–13
CHECKED	MTL	11–22–13
APPROVED	HCC	11–22–13

KOHLER CO.
POWER SYSTEMS, KOHLER, WI 53044 U.S.A.
THIS DRAWING, IN DESIGN AND DETAIL, IS KOHLER CO. PROPERTY AND MUST NOT BE USED EXCEPT IN CONNECTION WITH KOHLER CO. WORK. ALL RIGHTS OF DESIGN OR INVENTION ARE RESERVED.

TITLE: DIAGRAM, WIRING
SCALE / / / | CAD NO. | SHEET 1–2
PLOTTED | DWG. NO. GM89694 | D

REV	DATE	REVISION	BY	M F
–	11–22–13	NEW DRAWING [CT55093]	DFS	
A	8–18–15	SEE SHEET 1 [CT120983]	BTW	

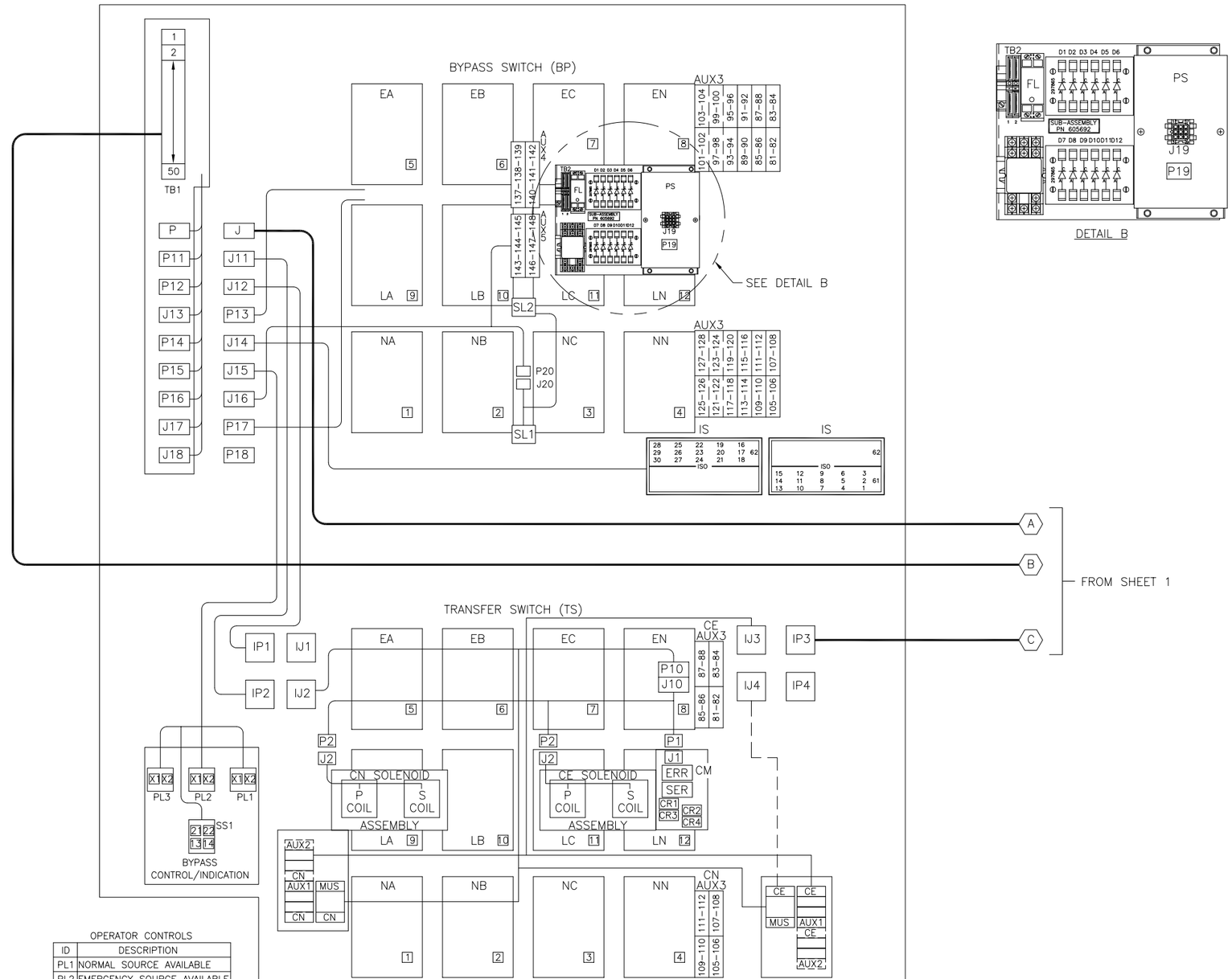

OPERATOR CONTROLS

ID	DESCRIPTION
PL1	NORMAL SOURCE AVAILABLE
PL2	EMERGENCY SOURCE AVAILABLE
PL3	CONTROLS NOT IN AUTO
SS1	ENGINE START

MODEL KCB
1600–4000A
BYPASS MECHANISM
CLOSED TRANSITION
FOR SCHEMATIC DIAGRAM SEE GM89693

UNLESS OTHERWISE SPECIFIED –
1) DIMENSIONS ARE IN INCHES
2) TOLERANCES ARE:
.XXX ± .010 ANGLES ± 1/2°
.XX ± .030 SURFACE FINISH
.X ± .060 √ MAX.
FRACTIONS ±

APPROVALS		DATE
DRAWN	DFS	11–22–13
CHECKED	MTL	11–22–13
APPROVED	HCC	11–22–13

KOHLER CO.
POWER SYSTEMS, KOHLER, WI 53044 U.S.A.

THIS DRAWING, IN DESIGN AND DETAIL, IS KOHLER CO. PROPERTY AND MUST NOT BE USED EXCEPT IN CONNECTION WITH KOHLER CO. WORK. ALL RIGHTS OF DESIGN OR INVENTION ARE RESERVED.

TITLE DIAGRAM ,WIRING

SCALE / / / | CAD NO. | SHEET 2–2
PLOTTED | DWG. NO. GM89694 | D

REV	DATE	REVISION	BY	M F
–	5–27–14	NEW DRAWING [CT82124]	DFS	

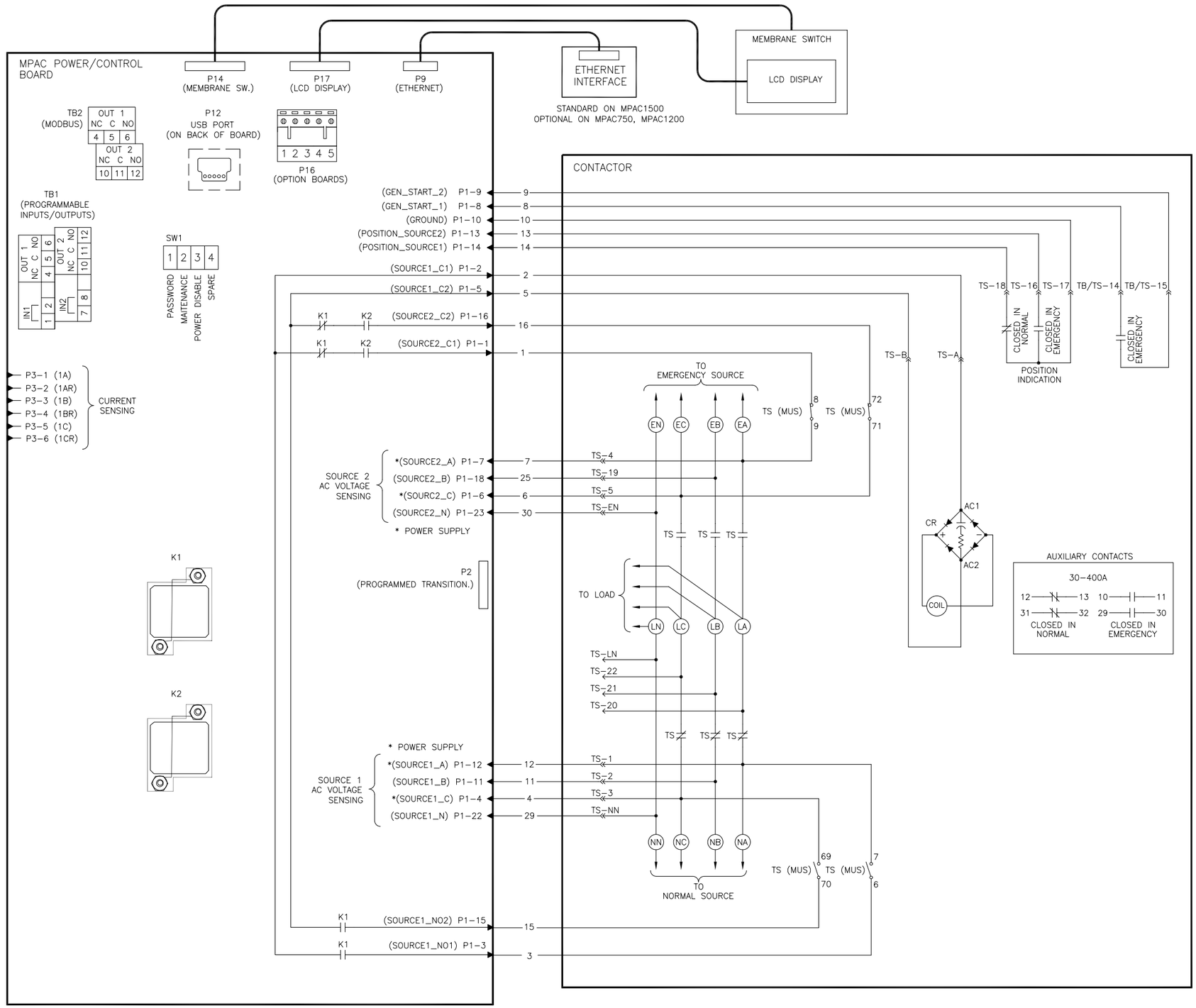

LEGEND

CR(#) – BRIDGE RECTIFIER
ERR – CONTROL MODULE RELAY
K(#) – RELAY
MLB – MAIN LOGIC BOARD
MUS – COIL CLEARING CONTACT
P(#) – PLUG
SER – CONTROL MODULE RELAY
SW(#) – DIP SWITCH
TB1 – CUST. CONNECTION TERMINAL BLOCK
TB2 – AUXILIARY TERMINAL BLOCK
TS – TRANSFER SWITCH
UIF – USER INTERFACE

TS (MUS) CONTACTS

TS	SOLENOID POSITION				
	PREF.	BEFORE TDC>	> <	BEFORE <TDC	STANDBY
7–6				X	X
69–70				X	X
8–9	X	X			
71–72	X	X			

NOTE:
SCHEMATIC SHOWN WITH "NORMAL" ENERGIZED AND CONTACTOR IN THE NORMAL POSITION.

FOR WIRING DIAGRAM SEE GM93715

MODEL KCS
260–400A
&230A, 600V
STANDARD MECHANISM
STANDARD TRANSITION

UNLESS OTHERWISE SPECIFIED –
1) DIMENSIONS ARE IN INCHES
2) TOLERANCES ARE:
.XXX ± .010 ANGLES ± 1/2°
.XX ± .030 SURFACE FINISH
.X ± .060 √ MAX.
FRACTIONS ±

APPROVALS		DATE
DRAWN	DFS	5–27–14
CHECKED	HC	5–27–14
APPROVED	HC	5–27–14

KOHLER CO.
POWER SYSTEMS, KOHLER, WI 53044 U.S.A.
THIS DRAWING, IN DESIGN AND DETAIL, IS KOHLER CO. PROPERTY AND MUST NOT BE USED EXCEPT IN CONNECTION WITH KOHLER CO. WORK. ALL RIGHTS OF DESIGN OR INVENTION ARE RESERVED.

TITLE DIAGRAM, SCHEMATIC
SCALE / / / CAD NO. SHEET 1–1
PLOTTED DWG. NO. GM93714 D

REV	DATE	REVISION	BY	M F
–	5–27–14	NEW DRAWING [CT82124]	DFS	

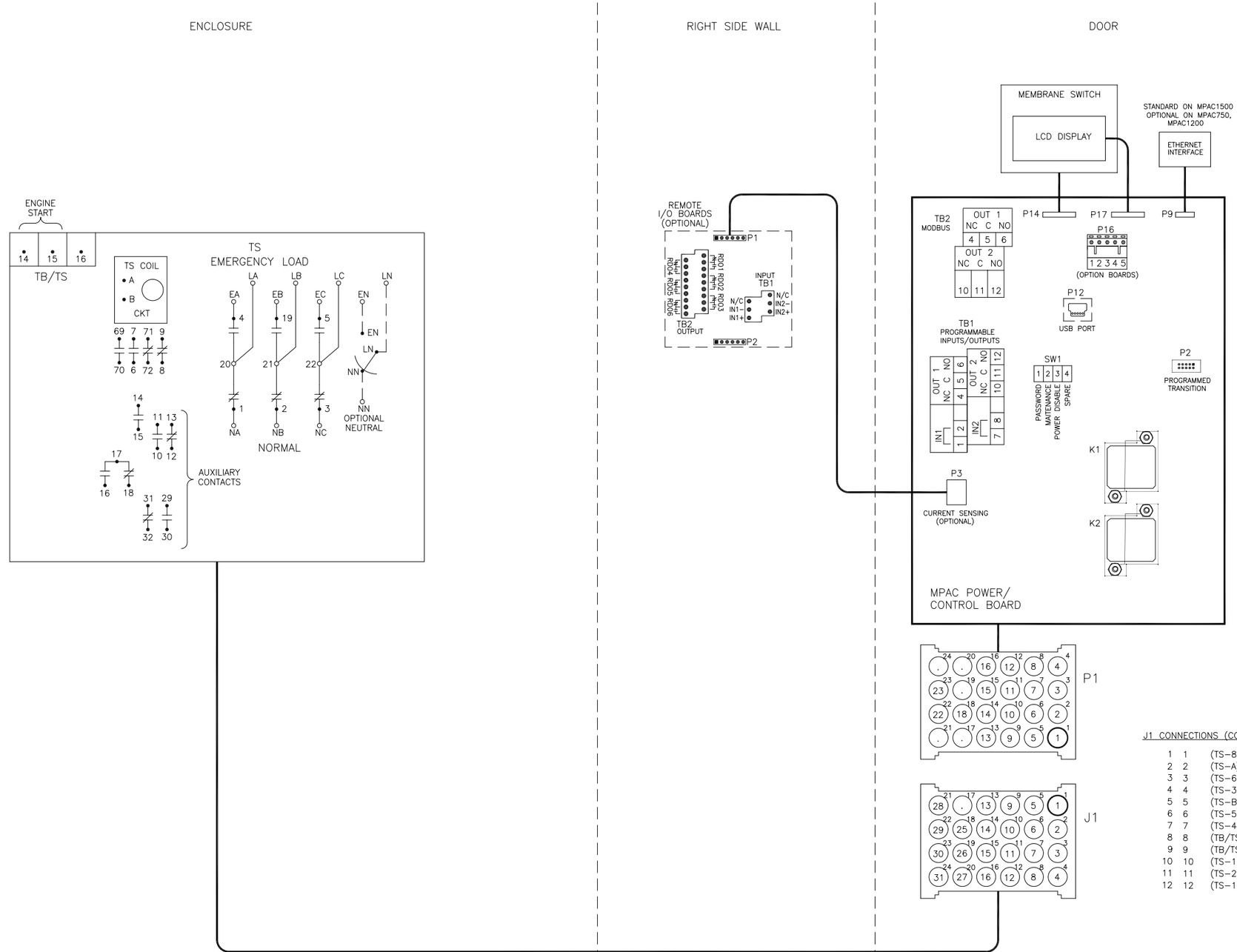

LEGEND

J(#) – CONNECTOR
P(#) – PLUG
TBF – TERMINAL BLOCK
TS – TRANSFER SWITCH

J1 CONNECTIONS (CONTACTOR TO MAIN LOGIC BOARD)

1	1	(TS–8)	13	13	(TS–16)
2	2	(TS–A)	14	14	(TS–18)
3	3	(TS–6)	15	15	(TS–70)
4	4	(TS–3)	16	16	(TS–72)
5	5	(TS–B)	17	N/C	.
6	6	(TS–5)	18	25	(TS–19)
7	7	(TS–4)	19	26	(TS–20)
8	8	(TB/TS–14)	20	27	(TS–21)
9	9	(TB/TS–15)	21	28	(TS–22)
10	10	(TS–17)	22	29	(TS–NN)
11	11	(TS–2)	23	30	(TS–EN)
12	12	(TS–1)	24	31	(TS–LN)

FOR SCHEMATIC DIAGRAM SEE GM93714

MODEL KCS
260–400A
& 230A, 600V
STANDARD MECHANISM
STANDARD TRANSITION

UNLESS OTHERWISE SPECIFIED – 1) DIMENSIONS ARE IN INCHES 2) TOLERANCES ARE:
.XXX ± .010 ANGLES ± 1/2°
.XX ± .030 SURFACE FINISH
.X ± .060 MAX.
FRACTIONS ±

APPROVALS		DATE
DRAWN	DFS	5–27–14
CHECKED	HC	5–27–14
APPROVED	HC	5–27–14

KOHLER CO.
POWER SYSTEMS, KOHLER, WI 53044 U.S.A.
THIS DRAWING, IN DESIGN AND DETAIL, IS KOHLER CO. PROPERTY AND MUST NOT BE USED EXCEPT IN CONNECTION WITH KOHLER CO. WORK. ALL RIGHTS OF DESIGN OR INVENTION ARE RESERVED.

TITLE DIAGRAM, WIRING

SCALE / / / | CAD NO. | SHEET 1–1
PLOTTED | DWG. NO. GM93715 | D

KOHLER®
Power Systems

KOHLER CO. Kohler, Wisconsin 53044
Phone 920-457-4441, Fax 920-459-1646
For the nearest sales/service outlet in the
US and Canada, phone 1-800-544-2444
KOHLERPower.com

Kohler Power Systems
Asia Pacific Headquarters
7 Jurong Pier Road
Singapore 619159
Phone (65) 6264-6422, Fax (65) 6264-6455

TP-6917 2/17c

© 2014, 2017 by Kohler Co. All rights reserved.