INSTALLATION INSTRUCTIONS

Original Issue Date: **2/99**
Model: **40/50RZ**
Market: **Industrial**
Subject: **Fuel Vaporizer Kit ES-37772**

Use the following instructions to convert a LP vapor fuel system to a LP liquid withdrawal fuel system.

Installation of the Fuel Vaporizer kit must comply with these installation instructions. Failure to install the fuel vaporizer per these installation instructions may result in poor generator set performance and affect the generator set warranty.

With the LP liquid withdrawal fuel system, LP fuel in liquid form is directed under pressure from the tank to a vaporizer. The vaporizer converts the fuel from a liquid to a gaseous state and then the LP vapor is drawn off to the carburetor. The system also includes a fuel valve which shuts off the fuel flow when the engine is stopped.

Observe the following safety precautions while installing the kit.

⚠ WARNING

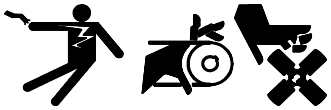

Accidental starting.
Can cause severe injury or death.

Disconnect the battery cables before working on the generator set. Remove the negative (–) lead first when disconnecting the battery. Reconnect the negative (–) lead last when reconnecting the battery.

Disabling the generator set. Accidental starting can cause severe injury or death. Before working on the generator set or connected equipment, disable the generator set as follows: (1) Move the generator set master switch to the OFF position. (2) Disconnect the power to the battery charger. (3) Remove the battery cables, negative (–) lead first. Reconnect the negative (–) lead last when reconnecting the battery. Follow these precautions to prevent starting of the generator set by an automatic transfer switch, remote start/stop switch, or engine start command from a remote computer.

⚠ WARNING

Explosive fuel vapors.
Can cause severe injury or death.

Use extreme care when handling, storing, and using fuels.

The fuel system. Explosive fuel vapors can cause severe injury or death. Vaporized fuels are highly explosive. Use extreme care when handling and storing fuels. Store fuels in a well-ventilated area away from spark-producing equipment and out of the reach of children. Never add fuel to the tank while the engine is running because spilled fuel may ignite on contact with hot parts or from sparks. Do not smoke or permit flames or sparks to occur near sources of spilled fuel or fuel vapors. Keep the fuel lines and connections tight and in good condition. Do not replace flexible fuel lines with rigid lines. Use flexible sections to avoid fuel line breakage caused by vibration. Do not operate the generator set in the presence of fuel leaks, fuel accumulation, or sparks. Repair fuel systems before resuming generator set operation.

LP liquid withdrawal fuel leaks. Explosive fuel vapors can cause severe injury or death. Fuel leakage can cause an explosion. Check the LP liquid withdrawal gas fuel system for leakage by using a soap and water solution with the fuel system test pressurized to at least 90 psi (621 kPa). Do not use a soap solution containing either ammonia or chlorine because both prevent bubble formation. A successful test depends on the ability of the solution to bubble.

Installation

1. Place the generator set master switch in the OFF position.
2. Disconnect the power to the battery charger, if equipped.
3. Disconnect the generator set engine starting battery(ies), negative (–) lead first.

4. Turn off the fuel supply to the generator set.
5. With the engine and radiator cool, drain the coolant into a suitable container. Dispose of all waste materials, (engine oil, fuel, coolant, etc.) in an environmentally safe manner. Contact local authority for procedures.

NOTE

The drain valve is located on the radiator bottom and/or on the side of engine crankcase.

NOTE

Apply pipe sealant to the male threads of all components before installation.

---

6. Disconnect the fuel supply line connected to the gas valve assembly.
7. Disconnect and remove the flexible fuel line located between the gas valve assembly and the pressure regulator assembly. Save the flexible fuel line for reinstallation later.
8. Disconnect the leads connected to the gas valve assembly.
9. Remove the existing fuel system components shown in Figure 1. Save the reducer bushing near the carburetor for installation later.

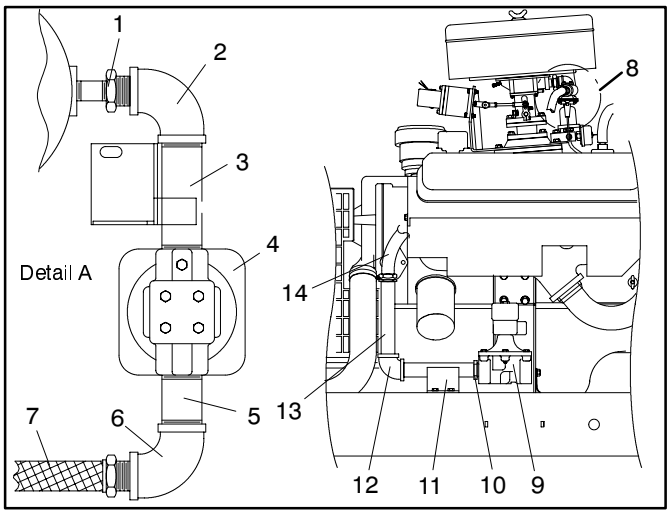

1. Reducer bushing (save)
2. Pipe elbow
3. Pipe
4. Pressure regulator
5. Pipe
6. Pipe elbow
7. Flexible fuel line
8. See Detail A
9. Gas valve assembly
10. Reducer bushing
11. Support bracket and pipe
12. Pipe elbow
13. Pipe
14. Flexible fuel line

Figure 1. Existing LP Gas Fuel System

10. Apply pipe sealant to the threads of the existing pipe from the carburetor and install the pipe elbow (X-215-2). Position the pipe elbow as shown in Figure 2.
11. Apply pipe sealant to the threads on one end of the 6.5 in. (165.10 mm) pipe (X-218-9) and thread the pipe into the pipe elbow installed in step 10.
12. Apply pipe sealant to the threads of the reducer bushing saved in step 9 and install the reducer bushing in the vaporizer outlet (326075). See Figure 2
13. Apply pipe sealant to the exposed threads of the 6.5 in. (165.10 mm) pipe installed in step 11 and thread the vaporizer and reducer onto the pipe. Position the vaporizer as shown in Figure 2.
14. Apply pipe sealant to the threads of the 3/8 x 1.0 in. pipe nipples (X-204-9) and install the pipe nipples in the vaporizer water inlet and outlet. See Figure 2.
15. Apply pipe sealant to the exposed threads of the pipe nipples installed in step 14 and thread the pipe elbows (X-215-9) onto the pipe nipples. Position the pipe elbows as shown in Figure 2.
16. Apply pipe sealant to the threads of the hose connectors (X-582-9) and install the hose connectors in the ends of the pipe elbows installed in step 15.
17. Apply pipe sealant to the threads of the 1/4 x 0.9 in. pipe nipple (X-220-5) and install the pipe nipple in the vaporizer inlet. See Figure 2.
18. Apply pipe sealant to the exposed threads of the pipe nipple installed in step 17 and thread the pipe elbow (X-215-5) onto the pipe nipple. Position the pipe elbow as shown in Figure 2.
19. Apply pipe sealant to the outlet threads of the fuel solenoid (256976) and thread the fuel solenoid into the pipe elbow installed in step 18. Position the fuel solenoid as shown in Figure 2.

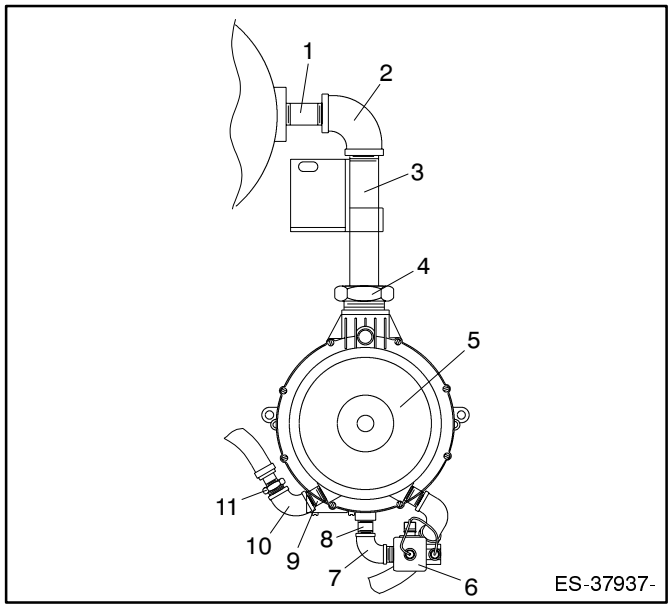

1. Pipe (existing)
2. Pipe elbow (X-215-2)
3. Pipe, 6 in. (152.40 mm) (X-206-15)
4. Reducer bushing (existing)
5. Vaporizer (326075)
6. Fuel solenoid (256976)
7. Pipe elbow (X-215-5)
8. Pipe, 0.9 in. (22.86 mm) (X-220-5)
9. Pipe existing
10. Pipe elbow (X-215-9)
11. Hose connector (X-582-9)

Figure 2. LP Liquid Fuel System—Top View

20. Disconnect and remove the rubber hose connected between the water manifold and the pipe tee in the top of the engine. See Figure 3. The rubber hose will not be reused. Save the hose clamps for reinstallation later.

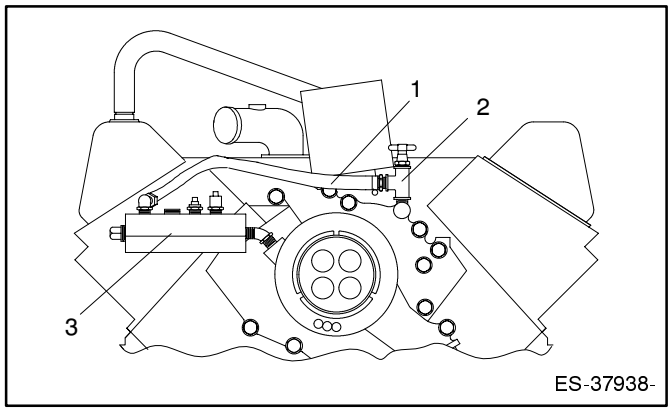

1. Rubber hose
2. Pipe tee
3. Water manifold

Figure 3. Engine—Front View

21. Rotate and position the pipe tee on the top of the engine as shown in Figure 4.

22. Connect one end of the rubber hose (X-651-11) to the vaporizer water inlet connection. Secure the hose to the hose connector with a hose clamp (X-426-9).

23. Connect the opposite end of the rubber hose connected in step 22 to the pipe tee. Secure the hose to the pipe tee with a hose clamp (X-426-9) See Figure 4.

24. Connect one end of the rubber hose (X-651-11) to the vaporizer water outlet connection. Secure the hose to the hose connector with one hose clamp removed in step 20.

25. Connect the opposite end of the rubber hose connected in step 24 to the water manifold hose connector. Secure the hose to the hose connector with the hose clamp removed in step 20. See Figure 4.

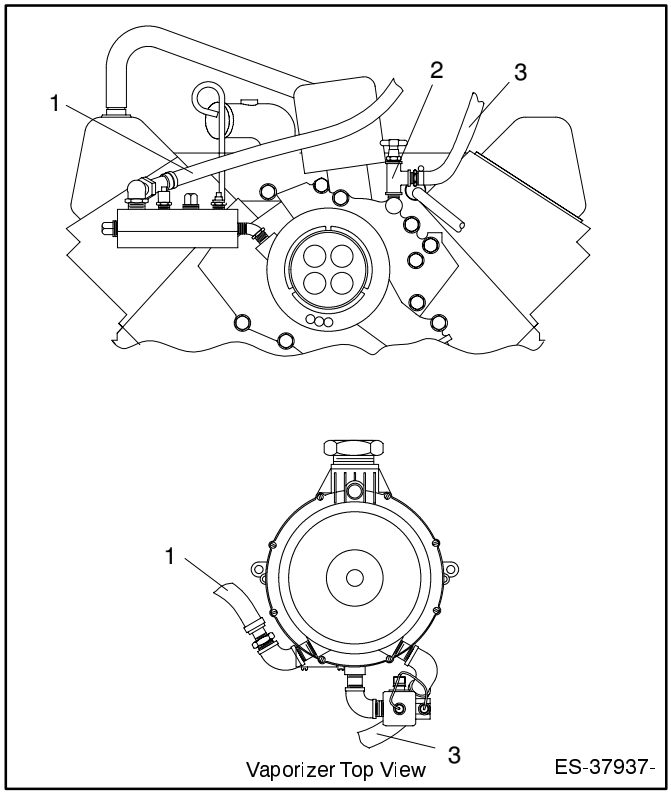

1. Vaporizer water outlet rubber hose 3.8 ft. (1.2 m) (X-651-11)
2. Pipe tee
3. Vaporizer water inlet rubber hose 3.8 ft. (1.2 m) (X-651-11)

Figure 4. Vaporizer Water Line Connections

26. Crimp the spade terminal (X-285-1) to lead (LW-1812-2216).

27. Connect the lead to the fuel solenoid and to the ground.

28. Connect the leads disconnected from the gas valve to the fuel solenoid. See Figure 5.

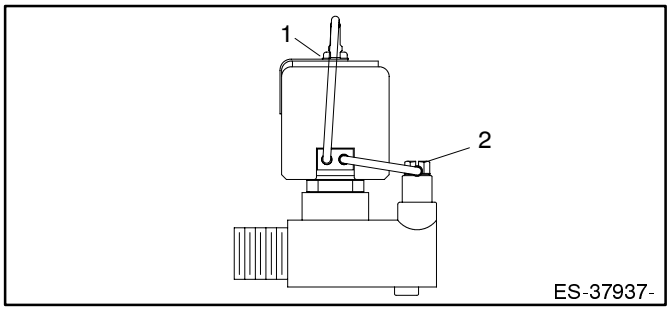

1. Positive connection
2. Negative connection

Figure 5. Fuel Solenoid

29. Connect the fuel supply line to the fuel solenoid.
30. Cut the two-pin connector from the harness formerly connected to the gas valve assembly. Crimp the customer supplied terminals to the leads.
31. Turn on the fuel supply to the generator set and test the connections for leaks. Turn off the fuel supply and correct leaks, if required. Turn on the fuel supply.
32. Check that the generator master switch is in the OFF position.
33. Reconnect the generator set engine starting battery, negative (–) lead last.
34. Reconnect the power to the battery charger, if equipped.

LP Liquid Withdrawal Kit

Parts List		
	Kit: ES-37772	
Qty.	**Description**	**Part Number**
1	Nipple, pipe, 3/8 x 1.0 in.	X-204-9
1	Nipple, pipe, 3/4 x 1.4 in.	X-206-9
1	Nipple, pipe, 3/4 x 6.0 in.	X-206-15
1	Elbow, pipe, 3/4 in.	X-215-2
1	Elbow, pipe, 1/4 in.	X-215-5
2	Elbow, pipe, 3/8 in.	X-215-9
1	Nipple, pipe, 1/4 x 7/8 in.	X-220-5
2	Clamp, hose	X-426-9
2	Connector, hose	X-582-9
2	Hose, 46 in. (1168.40 mm)	X-651-11
1	Solenoid, fuel	256976
1	Vaporizer, LP fuel	326075