THIS EDGE INTENTIONALLY LEFT BLANK FOR BINDING - PAPER SIZE 34" X 22" - THIS EDGE INTENTIONALLY LEFT BLANK FOR BINDING - PAPER SIZE 34" X 22" - THIS EDGE INTENTIONALLY LEFT BLANK FOR BINDING - PAPER SIZE 34" X 22" - THIS EDGE INTENTIONALLY LEFT BLANK FOR BINDING

HOLD

PENDING COORDINATION WITH UTILITY SERVICE ENTRANCE

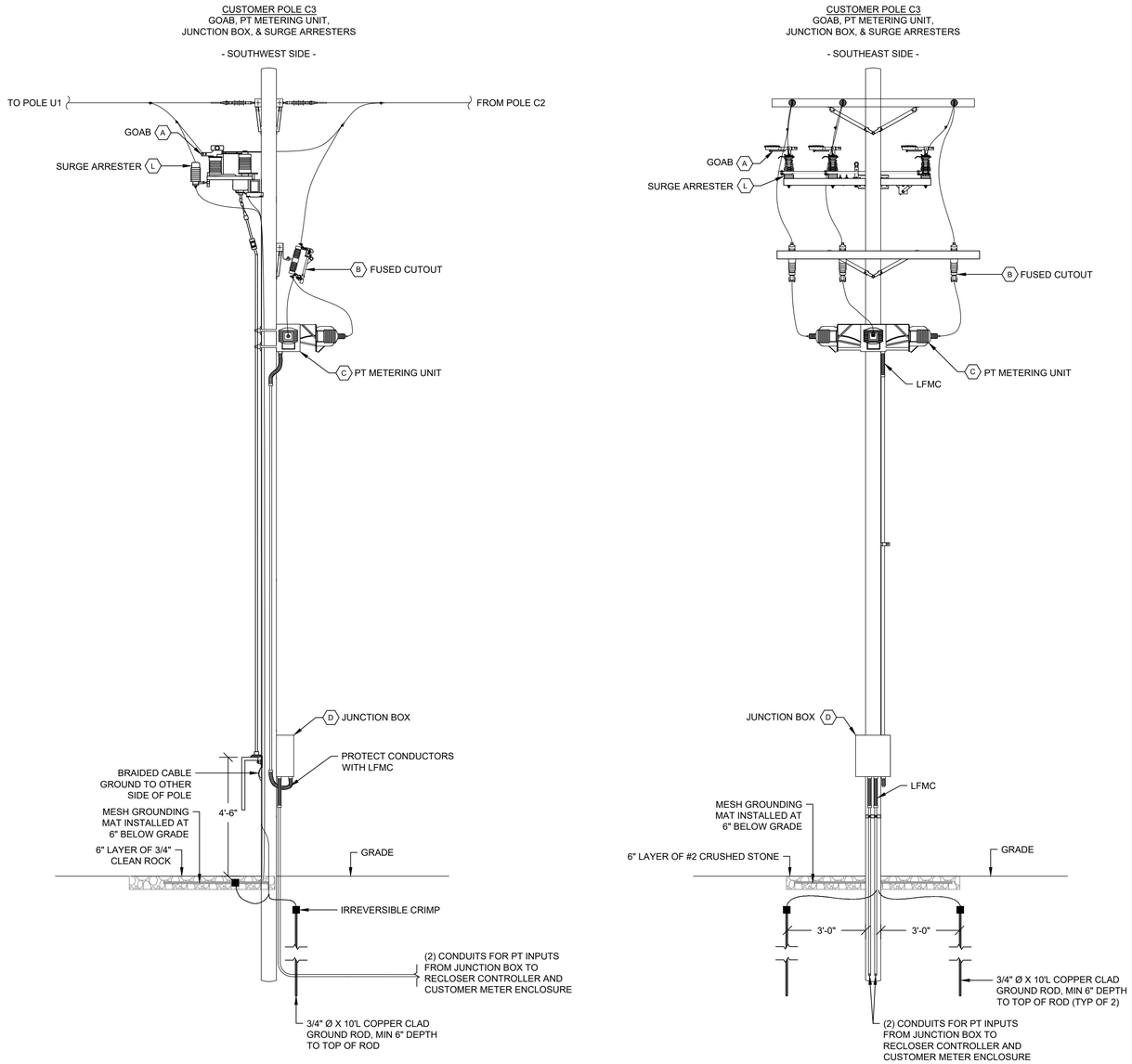

1 POI ELEVATIONS - CUSTOMER POLE C3
SCALE: NTS

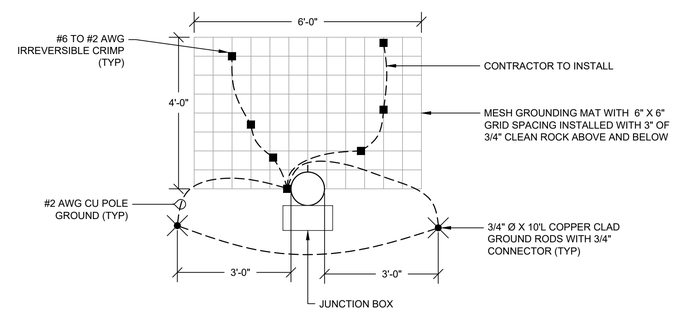

2 DETAIL OF GROUND GRID AT POLE C3
SCALE: NTS

SHEET NOTES:

1. ELEVATIONS ARE DIAGRAMMATIC AND INTENDED TO SHOW MAJOR EQUIPMENT LOCATIONS. CONTRACTOR SHALL COORDINATE MOUNTING CONFIGURATIONS, TERMINATIONS AND CLEARANCE REQUIREMENTS WITH SELECTED EQUIPMENT MANUFACTURERS, SITE CONDITIONS AND RELEVANT CODES. FOLLOW LOCAL UTILITY OR RURAL UTILITIES SERVICE ASSEMBLY UNITS FOR POLE CONSTRUCTION.
2. CUSTOMER POLES SHALL HAVE THE SAME SPECIFICATIONS AND EMBEDMENT AS UTILITY POLES. CONTRACTOR TO VERIFY IN FIELD.
3. MINIMUM HEIGHT ABOVE GRADE OF OVERHEAD CONDUCTORS SHALL BE 20 FEET OR AS REQUIRED BY NESC TABLE 232-1, WHICHEVER IS GREATER.
4. ALL EQUIPMENT TO BE GROUNDED AS REQUIRED. NOT SHOWN FOR CLARITY.
5. KEEP GROUND WIRES FOR SURGE ARRESTERS SEPARATE FROM GROUND WIRES FOR POLE MOUNTED EQUIPMENT.
6. INSTALL MINIMUM OF (1) 3/4" Ø X 10'L COPPER GROUND ROD AT ALL CUSTOMER POLES.
7. STAPLES ON GROUND WIRE SHALL BE 2'-0" APART EXCEPT FOR A DISTANCE OF 8'-0" ABOVE GROUND AND 8'-0" FROM TOP OF POLE WHERE THEY SHALL BE 6" APART.
8. MV CONDUIT INSTALLED ON POLES SHALL EXTEND TO MINIMUM 8 FEET ABOVE FINISHED GRADE PER NEC 300.50(C) AND NESC 239(D). CONDUIT SHALL BE RIGID STEEL, GROUNDED AND SEALED AT THE TOP TO PREVENT INGRESS OF MOISTURE.
9. MAINTAIN PROPER CLEARANCES OR INSTALL INSULATED OVERHEAD JUMPERS.
10. ARRESTER LEAD LENGTH SHALL BE AS SHORT AS POSSIBLE. OVERHEAD CONDUCTORS SHALL CONNECT TO RISER ARRESTERS. RISER ARRESTERS SHALL THEN CONNECT TO THE UNDERGROUND CABLE TERMINATION.
11. ALL TERMINATIONS SHALL BE PROPERLY PREPARED INCLUDING USE OF OXIDE INHIBITOR.
12. GANG OPERATED AIR BREAK SWITCH SHALL BE GROUNDED ON BOTH FRAME AND HANDLE.
13. CONTRACTOR SHALL ALIGN AND ADJUST THE GANG OPERATED DISCONNECT SWITCH AS NEEDED TO ENSURE THAT THE SWITCH OPERATES PER THE MANUFACTURERS INSTALLATION AND OPERATION INSTRUCTIONS.
14. PROVIDE GRADIENT CONTROL MAT AT ALL OPERABLE SWITCH LOCATIONS.
15. MANUFACTURER AND CATALOG NUMBERS ARE FOR REFERENCE ONLY. ENGINEER APPROVED EQUALS WILL BE ACCEPTED.
16. ALL LIVE PARTS MUST BE 12" MIN FROM OTHER LIVE PARTS. ALL LIVE PARTS MUST BE 7" MIN FROM GROUNDED PARTS.
17. ALL UTILITY POLES SHALL CONFORM TO ANSI 05.1, AWPA C4, ANSI C2 AND ANY OTHER APPLICABLE STANDARD.
18. CONTRACTOR SHALL LEAVE ADEQUATE CONDUCTOR LENGTH PER PHASE FOR UTILITY CONNECTION.
19. SEE ONE LINE DIAGRAM FOR CONDUCTOR SIZING, CONDUIT SIZING, AND EQUIPMENT SPECIFICATIONS.

LEGEND:

(X) SEE E-401 FOR EQUIPMENT SPECIFICATIONS.

DESIGN COORDINATOR

KNOBELSDORFF

25701 370TH STREET
GOODHUE, MN 55027

PROJECT

138883 CEMETERY SUN, LLC

24638 ADAMS RD,
FREDERICK, IL 62639
40.089020°, -90.442132°

ENGINEER

STELLAVISE
SOLAR ENGINEERING

2535 CAMINO DEL RIO S, STE. 235
SAN DIEGO, CA 92108
IL DESIGN FIRM #184.009162

WWW.STELLAVISE.COM (619) 837-5331

SEAL

LICENSED PROFESSIONAL ENGINEER
BRICE CASEBEER
062-070349
02/27/2026
STATE OF ILLINOIS

THIS DRAWING AND ALL INFORMATION HEREIN IS THE PROPERTY OF STELLAVISE INC. ANY REPRODUCTION, MODIFICATION OR USE OF THIS DRAWING FOR OTHER THAN THE INTENDED PROJECT WITHOUT PRIOR WRITTEN AUTHORIZATION FROM STELLAVISE INC. IS STRICTLY FORBIDDEN.

REVISIONS

#	DESCRIPTION	DATE
0	IFC	02/06/2026
1	IFC R1	02/27/2026

ISSUED FOR CONSTRUCTION
FEBRUARY 27, 2026

138883 CEMETERY SUN, LLC
FREDERICK, IL, 62639

SHEET TITLE

ELEVATION - GOAB

SHEET NO.

E-302